Headlight guard

Yamaha T7 Tenere 700

ID:3034653

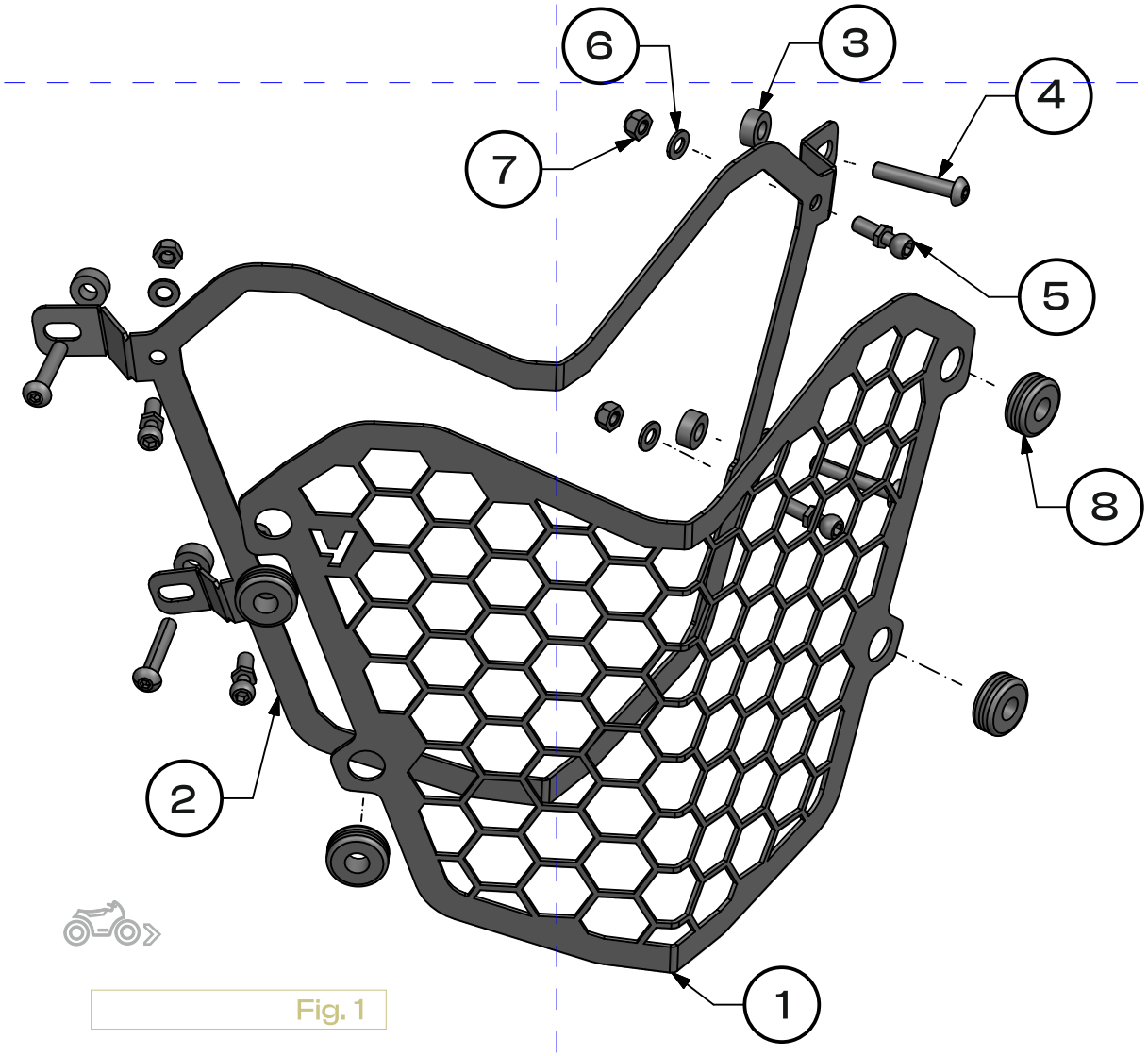

Fig. 1

1 Headlight guard 1×	2 Frame 1×	3 Spacer d6xD12xh5 4×	4 Bolt M5x30 DIN 7380 4×
5 Bolt 4×	6 Washer M5-DIN 125 4×	7 Nut M5-DIN 985 4×	8 Grommets 4×

Read before installation.
All bolts have to be finaly tighten after installation all parts on vehicle.

one person — use a medium-stregth — tighten with torque — OEM Original Equipment Manufacturer

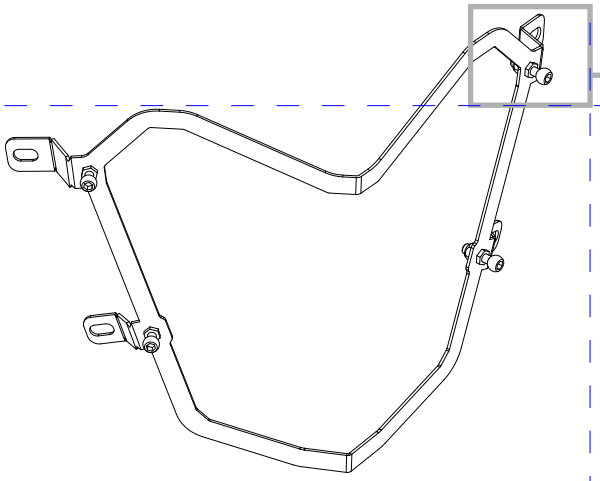

Screw **(5)** fastening the frame **(2)**, tighten through washer **(6)** with nut **(7)**. **[Fig. 2]**

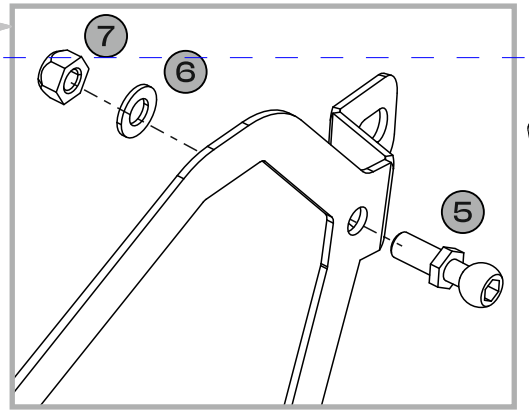

Fig. 2

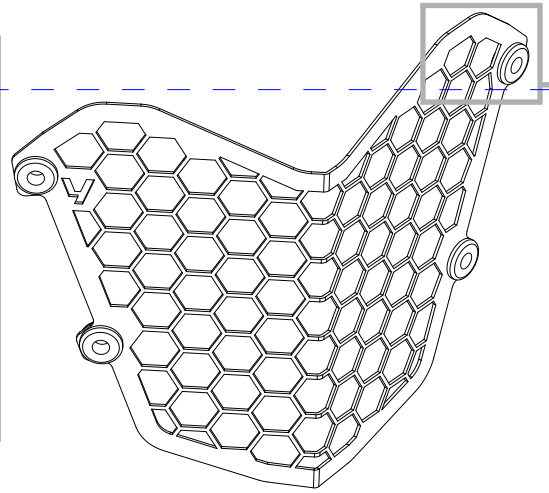

Mount the grommets **(8)** in the holes of the headlight guard **(1)**. **[Fig. 3]**

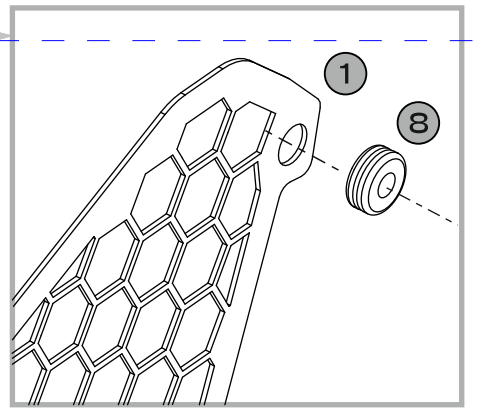

Fig. 3

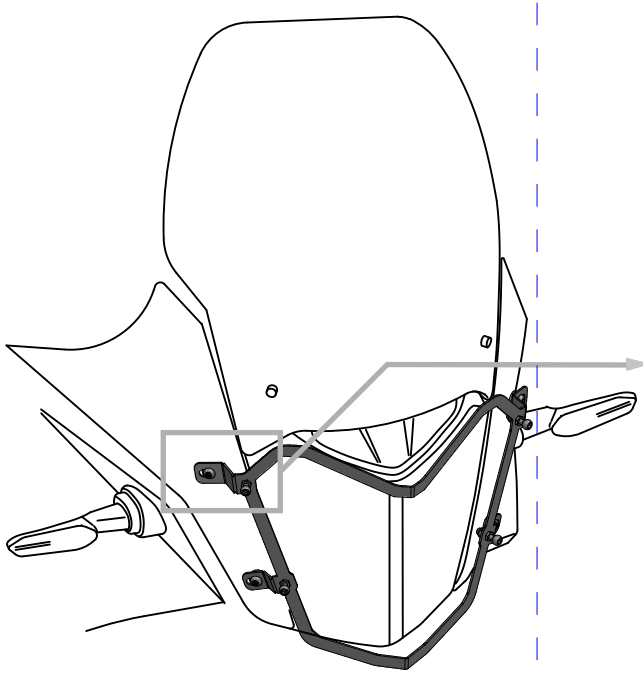

Attach the frame **(2)** with the bolt **(4)**, using the spacer **(3)**. **[Fig. 4]**

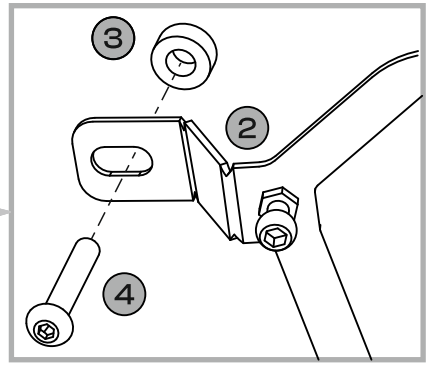

Fig. 4

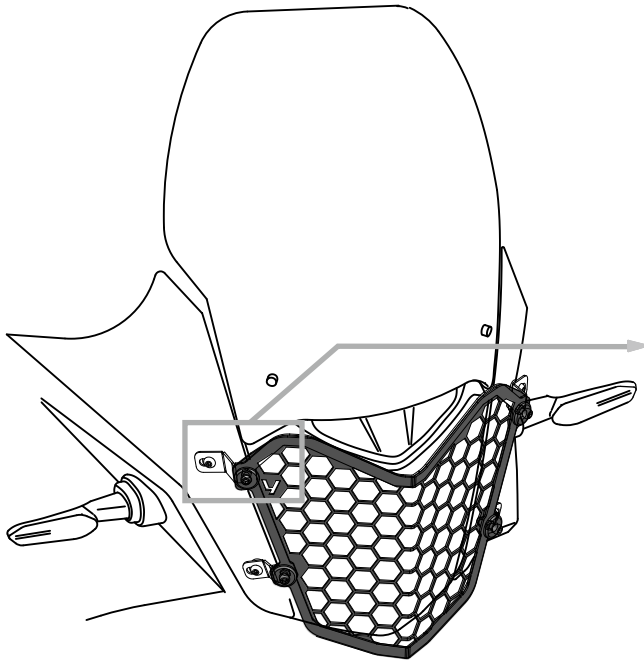

Mount the headlight guard **(1)** on to the frame **(2)** by pressing the grommets **(8)** onto the bolt **(5)**. For better fastening, apply grease to the bolt **(5)**. **[Fig. 5]**

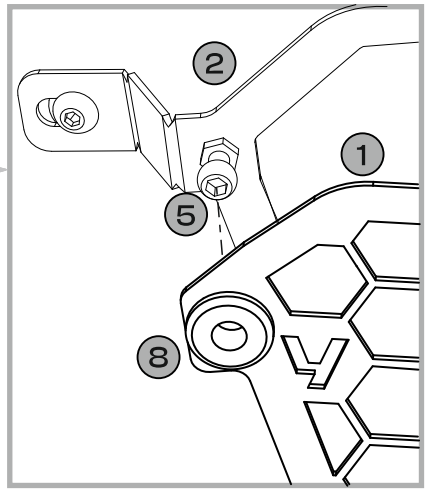

Fig. 5