High fuel filler neck

KTM 690 19-

ID: 3039250

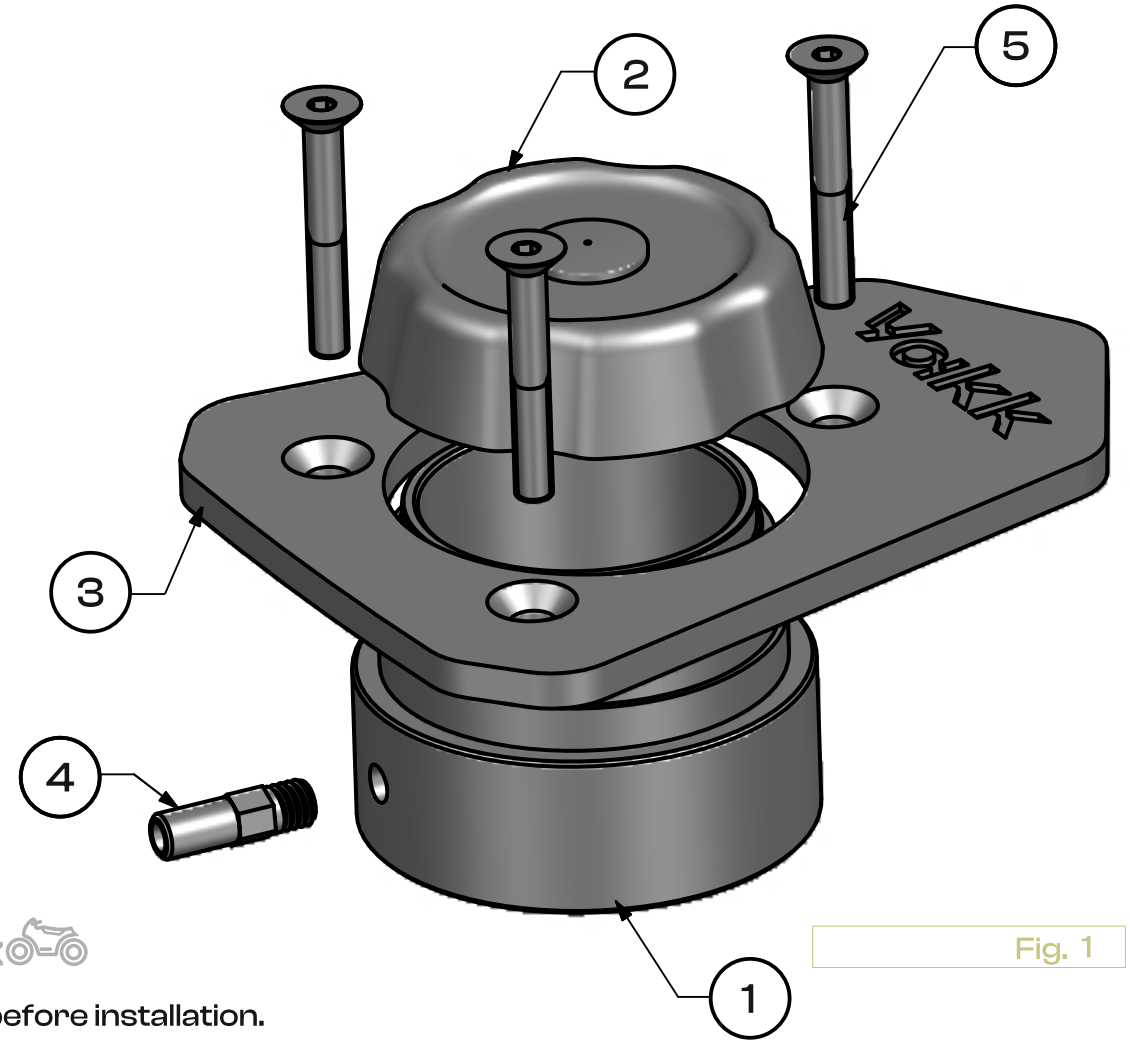

Fig. 1

1 Fuel filler — 1x

2 Cap — 1x

3 Plate — 1x

4 Nipple — 1x
M. 6

5 Bolt — 3x
M5x35-DIN EN ISO 7991

Read before installation.

Use the original fuel filler gasket
The seat opening cable let out sideways under the plastic

one person — use a medium-stregth — tighten with torque — OEM Original Equipment Manufacturer

	Steel 8.8
M4	2,7
M5	5,5
M6	9,7
M8	23,0
M10	47,0
M12	80,0
M14	130,0
M16	196,0
M18	270,0
M20	385,0