Full bunker crash bars

SUZUKI DL 650 V Strom XT

ID:2984562

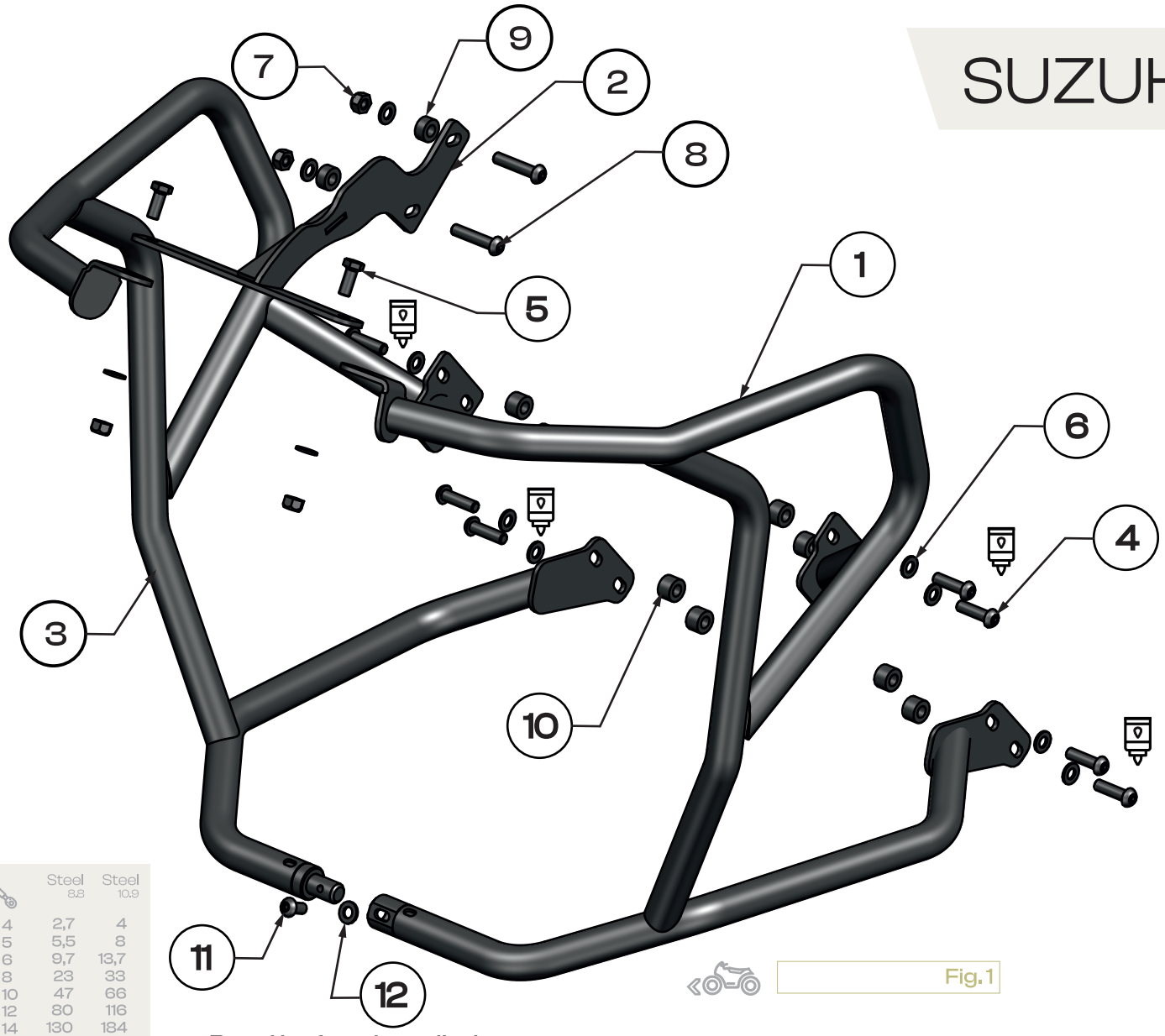

Fig.1

	Steel 8.8	Steel 10.9
M4	2,7	4
M5	5,5	8
M6	9,7	13,7
M8	23	33
M10	47	66
M12	80	116
M14	130	184
M16	196	287
M18	270	395
M20	385	560

1 Left crash bar	1x	2 Central bracket	1x
3 Right crash bar	1x		
4 Bolt	M8x35 -DIN 7380 8x	5 Bolt	M8x20 -DIN 4017 2x
6 Washer	M8-DIN 125 12x		
7 Nut	M8-DIN 985 4x	8 Bolt	M8x45 -DIN 7380 2x
9 Spacer sleeve	D17xH8 xd9 2x		
10 Spacer sleeve	D17xH11 xd9 8x	11 Bolt	M6x16 -DIN 7380 1x
12 Washer	M6-DIN 125 1x		

Read before installation.

All bolts have to be finaly tighten after installation all parts on vehicle.

one person — use a medium-stregth — tighten with torque — OEM Original Equipment Manufacturer

Read before installation.

All bolts have to be finaly tighten after install ation all parts on vehicle.

follow yakkexp join #yakkherd

Unscrew the bolt marked as OEM in **[Fig.4]** using the appropriate wrenches from the tool set. Attach the Central Bracket **[2],** to the motorcycle using bolt M8x45 **[8]**, spacer sleeve **[9]**, washer **[11]** and Nut M8 **[8]. [Fig.2], [Fig.3]**. Apply medium-strength threadlocker.

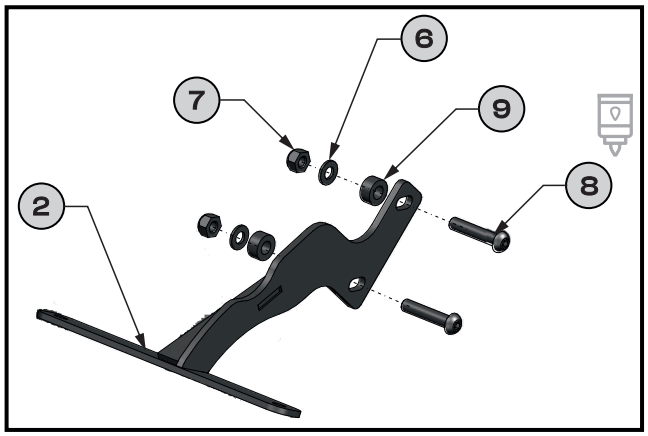

Fig. 2

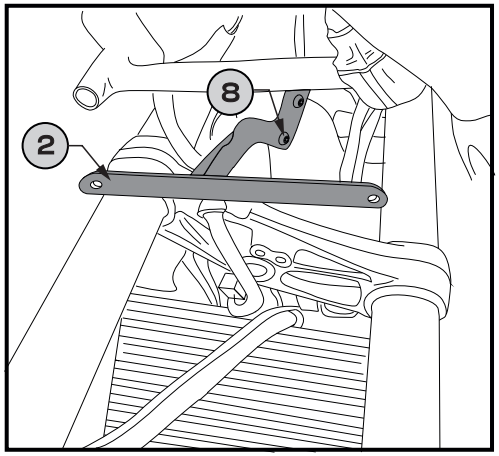

Fig. 3

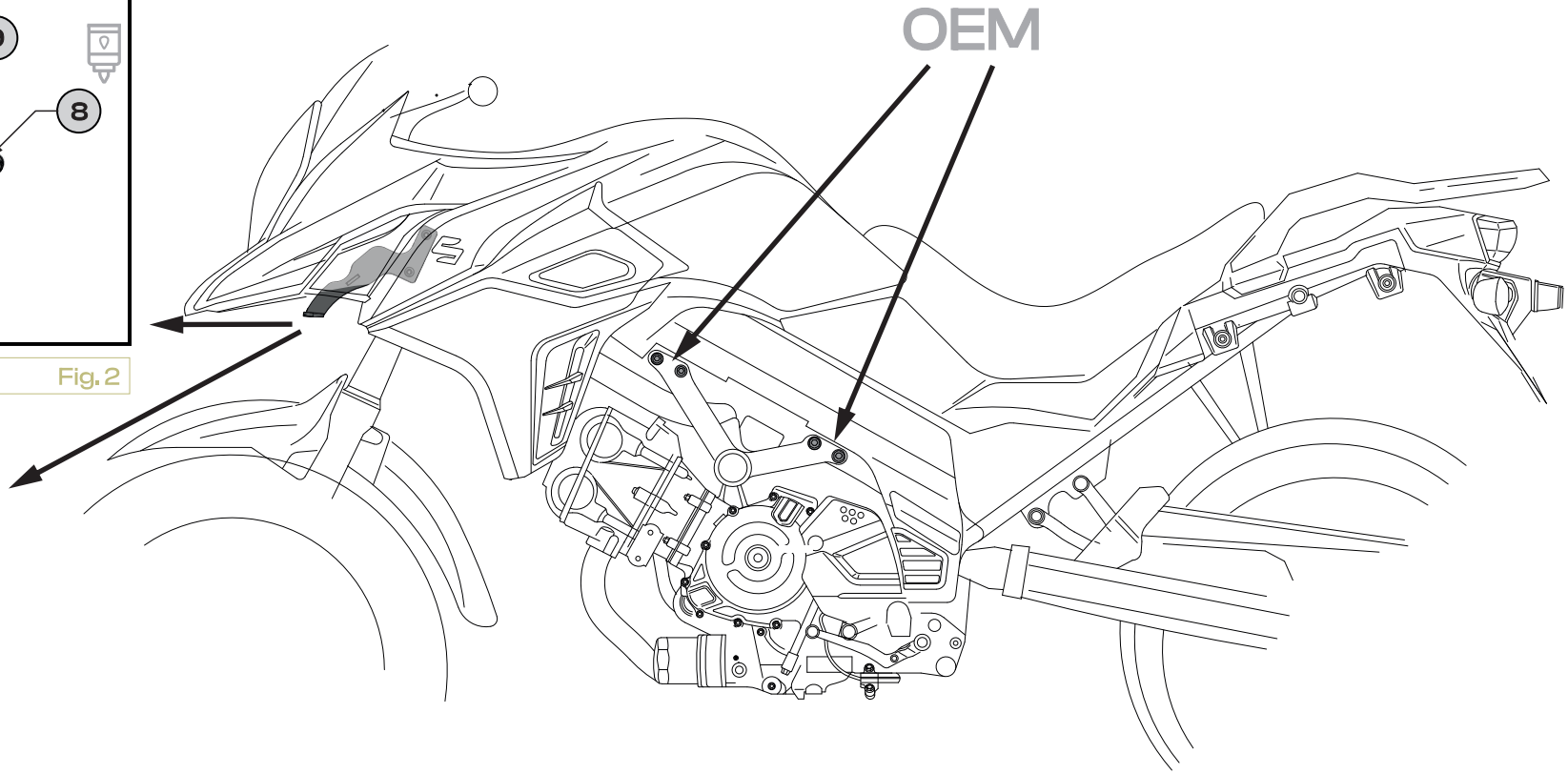

Fig. 4

one person | use a medium-stregth | tighten with torque | **OEM** Original Equipment Manufacturer

Read before installation.

All bolts have to be finaly tighten after install ation all parts on vehicle.

follow yakkexp join #yakkherd

Attach the left crash bars **[1]** to the designated mounting points on the motorcycle using bolt **[4]** M8x35 with washer **[6]** and spacer sleeve **[10]. [Fig. 1], [Fig. 5]** , **[Fig. 8]**. Repeat the procedure for the right crash bar as well. Attach the left crash bar **[1]** and right crash bar [3] to the central bracket **[2]** using bolt **[5]** M8x20 with washer **[6],** and secure with nut **[7]** M8. Tighten everything loosely at this stage. **[Fig. 1], [Fig. 5]**, **[Fig. 6]**. Attach the left crash bars **[1]** to right crash bars **[3]** using bolt **[11]** M6x16 with washer **[12]**.**[Fig. 7]** Apply medium-strength threadlocker.

Fig. 5

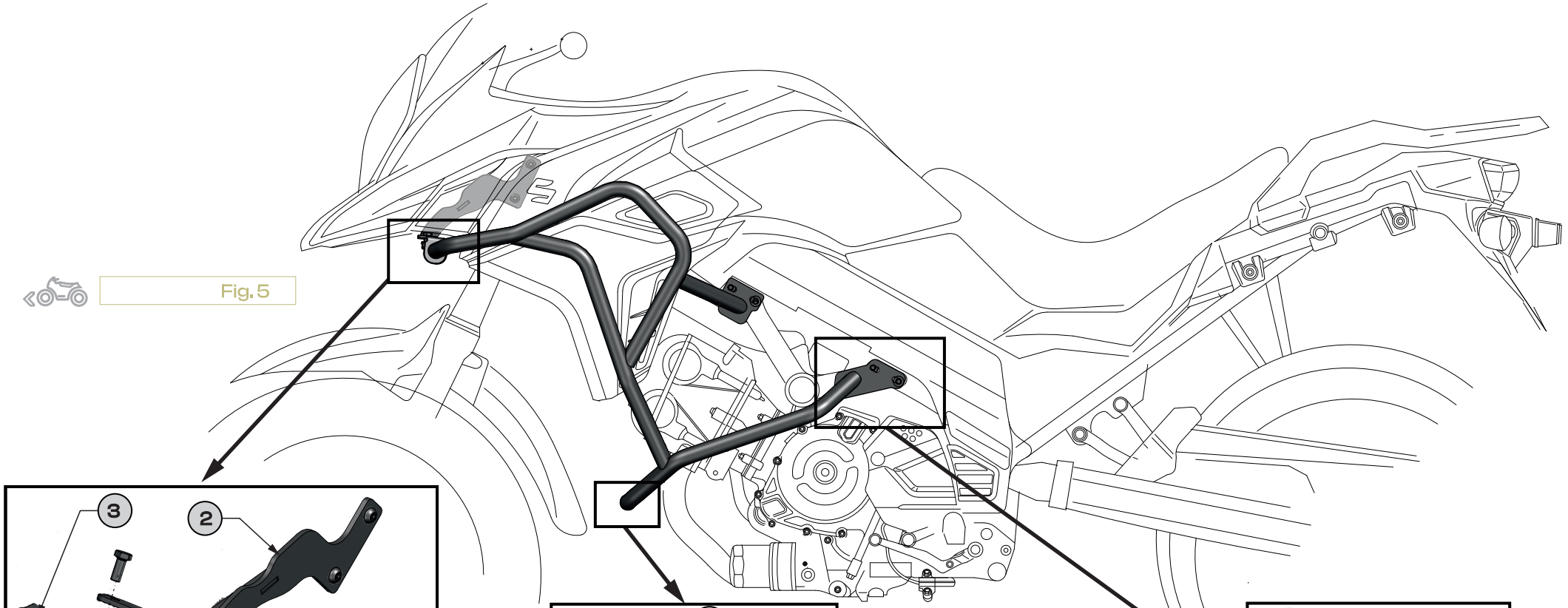

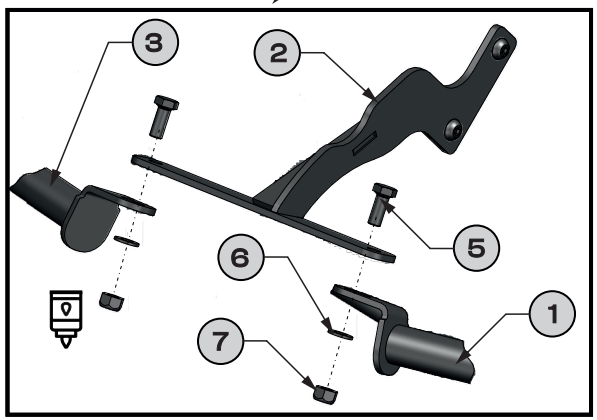

Fig. 6

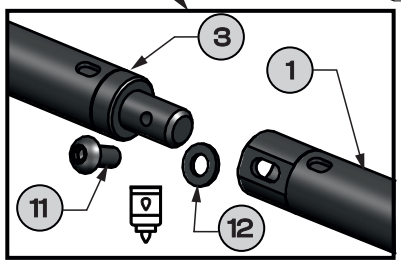

Fig. 7

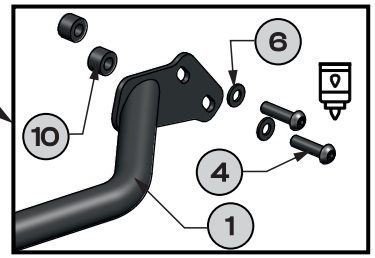

Fig. 8

one person | use a medium-stregth | tighten with torque | OEM Original Equipment Manufacturer