Topcase rack

Honda CRF 300 Rally

ID:3066000

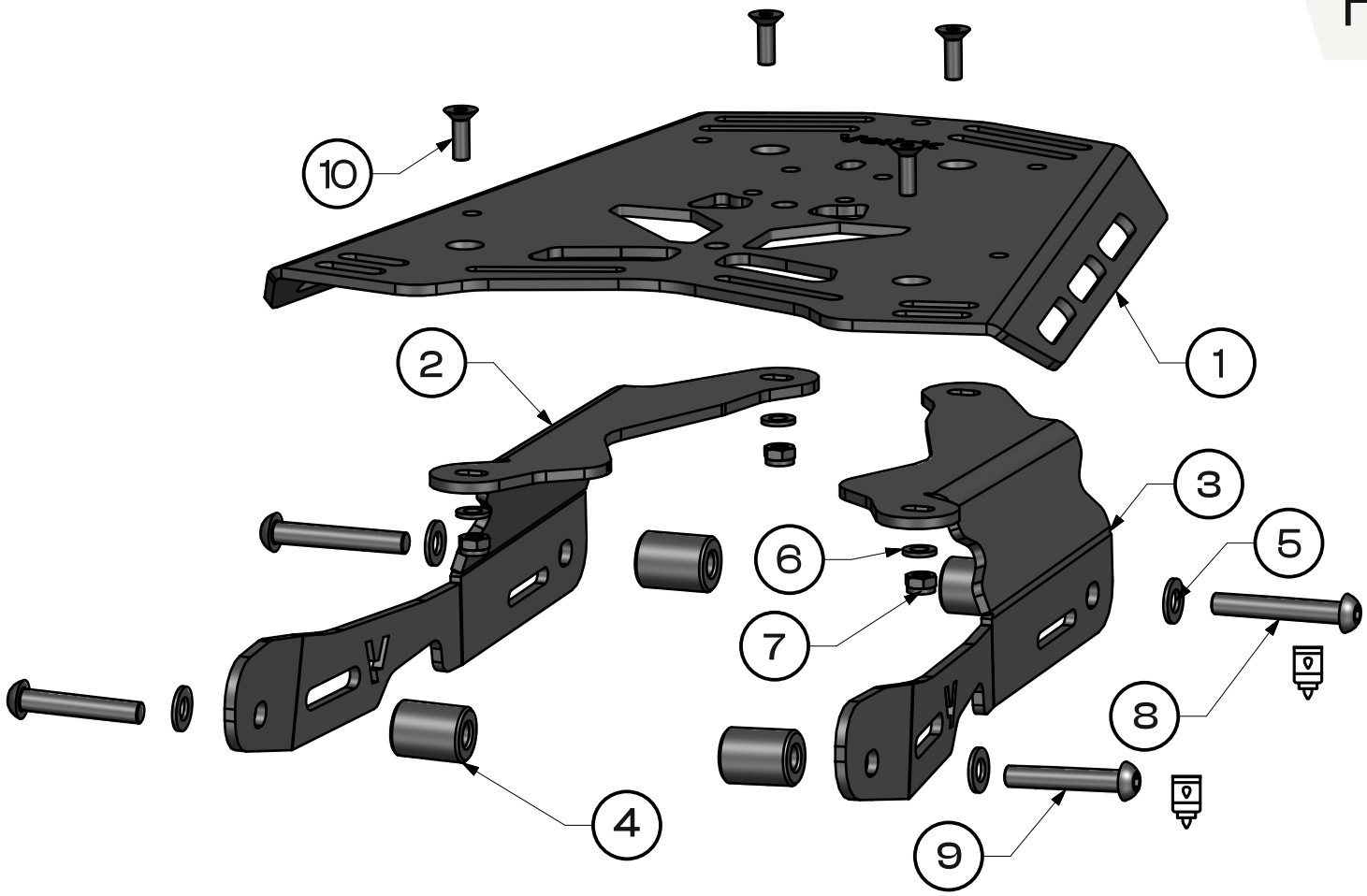

Fig. 1

	Steel 8.8	Steel 10.9
M4	2,7	4
M5	5,5	8
M6	9,7	13,7
M8	23	33
M10	47	66
M12	80	116
M14	130	184
M16	196	287
M18	270	395
M20	385	560

1 Top case plate — 1×

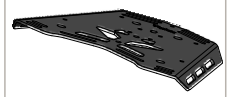

2 Right bracket — 1×

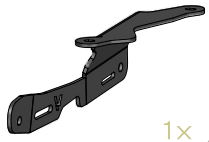

3 Left bracket — 1×

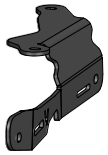

4 Spacer sleeve — D20xd8.5xH26 — 4×



5 Washer — M8-DIN 125 — 4×



6 Washer — M6-DIN 125 — 4×



7 Nut — M6 DIN 985 — 4×



8 Bolt — M8x50 -DIN 7380 — 2×



9 Bolt — M8x45 -DIN 7380 — 2×



10 Bolt — M6x18-DIN 7991 — 4×



Read before installation.

All bolts have to be finaly tighten after installation all parts on vehicle.

In the case of installation with the YAKK EXP product ID:3016217 , use the spacer sleeves from product ID:3066000, and the mounting bolts from product ID:3016217.

one person — use a medium-stregth — tighten with torque — OEM Original Equipment Manufacturer

Yakk EXP

assembly instructions

yakkexp.com

EXPLORE POSSIBILITIES

Read before installation.

All bolts have to be finaly tighten after install ation all parts on vehicle.

follow yakkexp join #yakkherd

Unscrew the bolt marked as OEM in **[Fig.2]** using the appropriate wrenches from the tool set. Fasten bracket **[2]** to the motorcycle frame at the rear (rear bracket mounting point) using spacer sleeves **[4]** and **[7],** with bolt **[8]** – M8×50 DIN 7380 and washer **[5]** – M8 DIN 125.At the front, secure the bracket to the motorcycle using bolt **[9]** – M8×45 DIN 7380, passing through washer **[5]** – M8 DIN 125 and spacer sleeve **[4]**, as shown in the diagram. Repeat the same procedure on the opposite side, mounting bracket **[3]. [Fig.1],[Fig.2],[Fig.3],[Fig.4]**

Use medium-strength threadlocker on bolts



Fig. 2



Fig. 3

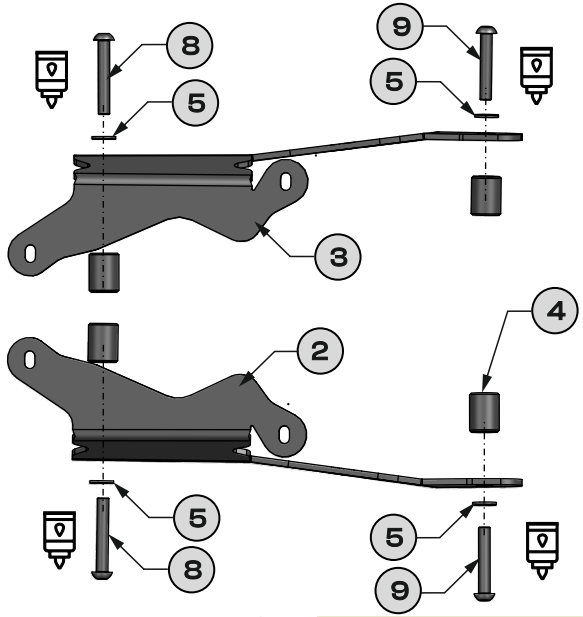

Fig. 4

Attach the top case plate **[1]** to brackets **[2]** and **[3]** using bolts **[10]** – M6×18 DIN 7991. Tighten them with nuts **[7]** – M6 DIN 985, placing washer **[6]** under each nut.**[Fig.1],[Fig.5],[Fig.6].** Tighten all bolts to the specified torque.

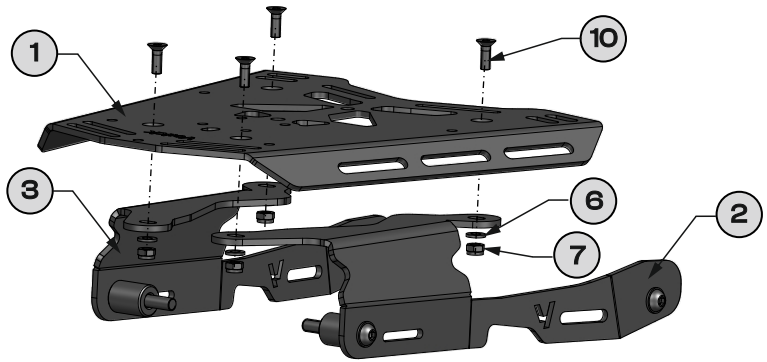

Fig. 5



Fig. 6

one person | use a medium-stregth | tighten with torque | OEM Original Equipment Manufacturer