Read before installation.

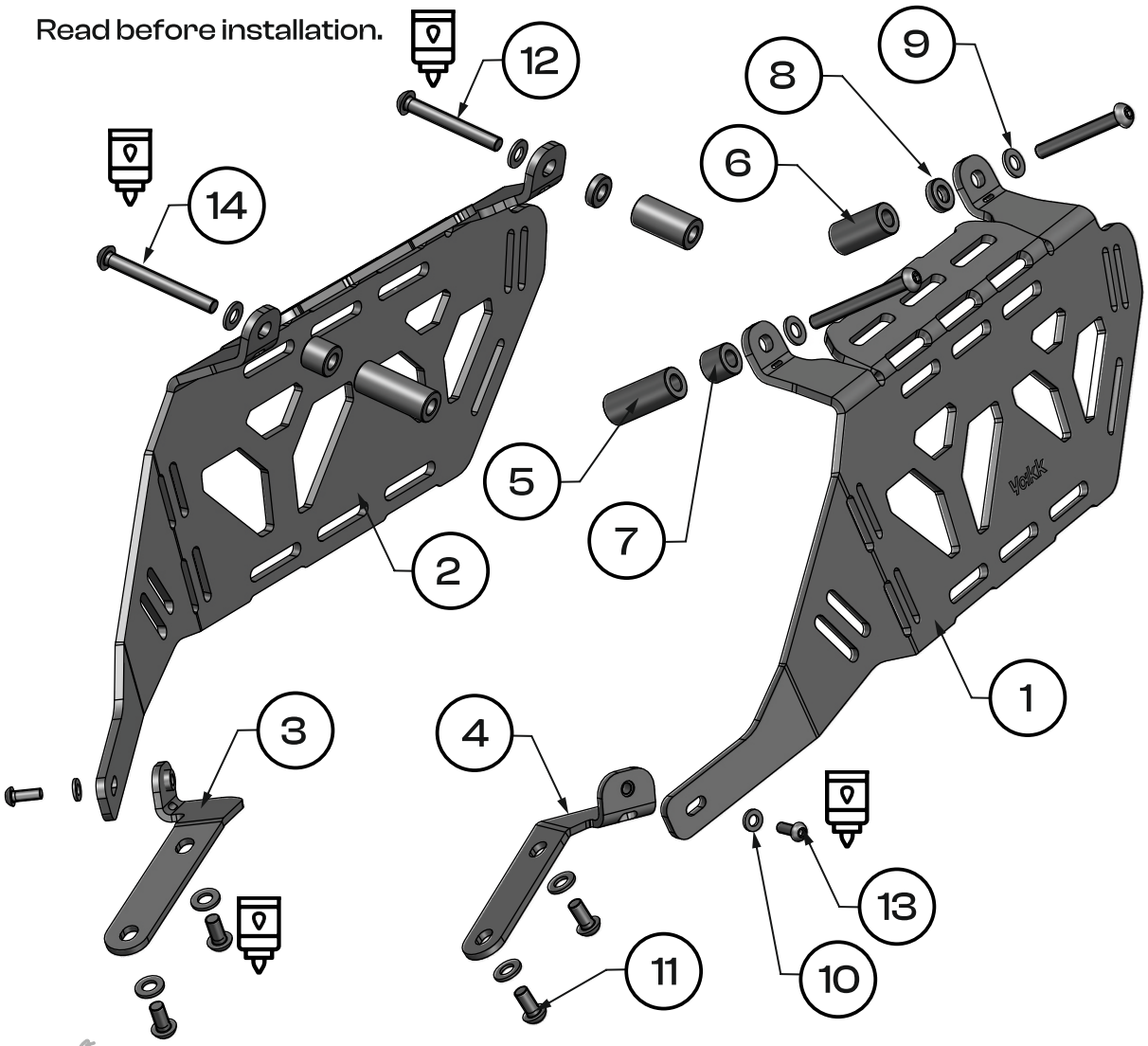


Fig. 1

All bolts have to be finaly tighten after installation all parts on vehicle.

Parts [7], and [8] are used in the case of assembly with **Yaak exp ID: 2742346.**

Soft luggage side racks

# Yamaha T7 Tenere 700

ID:3077856

| | | | |
|---|---|---|---|
| 1 Luggage plate - Left 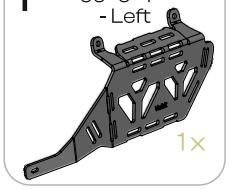 1x | 2 Luggage plate - Right  1x | 3 Left bracket  1x | 4 Right bracket 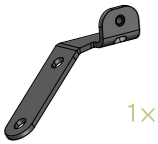 1x |
| 5 Spacer sleeve  d9xD18xH45 2 x | 6 Spacer sleeve  d9xD18xH35 2 x | 7 Spacer sleeve  d9xD18xH15 2 x | 8 Spacer sleeve  d9xD18xH5 2 x |

| Steel 8.8 | |
|---|---|
| M4 | 2,7 |
| M5 | 5,5 |
| M6 | 9,7 |
| M8 | 23,0 |
| M10 | 47,0 |
| M12 | 80,0 |
| M14 | 130,0 |
| M16 | 196,0 |
| M18 | 270,0 |
| M20 | 385,0 |

| | | |
|---|---|---|
| 9 Washer  M8-DIN 125 8x | 10 Washer  M6-DIN 125 2x | 11 Bolt  M8x16-DIN 7380 4x |
| 12 Bolt  M8x60-DIN 7380 2x | 13 Bolt  M6x16-DIN 7380 2x | 14 Bolt  M8x70-DIN 7380 2x |

one person — use a medium-stregth — tighten with torque — OEM Original Equipment Manufacturer

**!!! Use a medium-strength threadlocker on the bolts indicated in the figures**

follow yakkexp join #yakkherd

Using the appropriate tool, unscrew the **OEM** bolts securing the rear passenger footpegs and the bolts near the seat indicated by the arrow. Repeat the procedure on the opposite side of the motorcycle.**[Fig.4]**
Attach the Right bracket **[4]** to the frame through the passenger footpegs using the **OEM** bolts and washer **[11]** (M8x16-DIN7380).
If the passenger footpegs are not installed, use the shorter bolts [9] (M8-DIN125) from the kit instead.**[Fig.4]**
Repeat the procedure on the opposite side of the motorcycle.

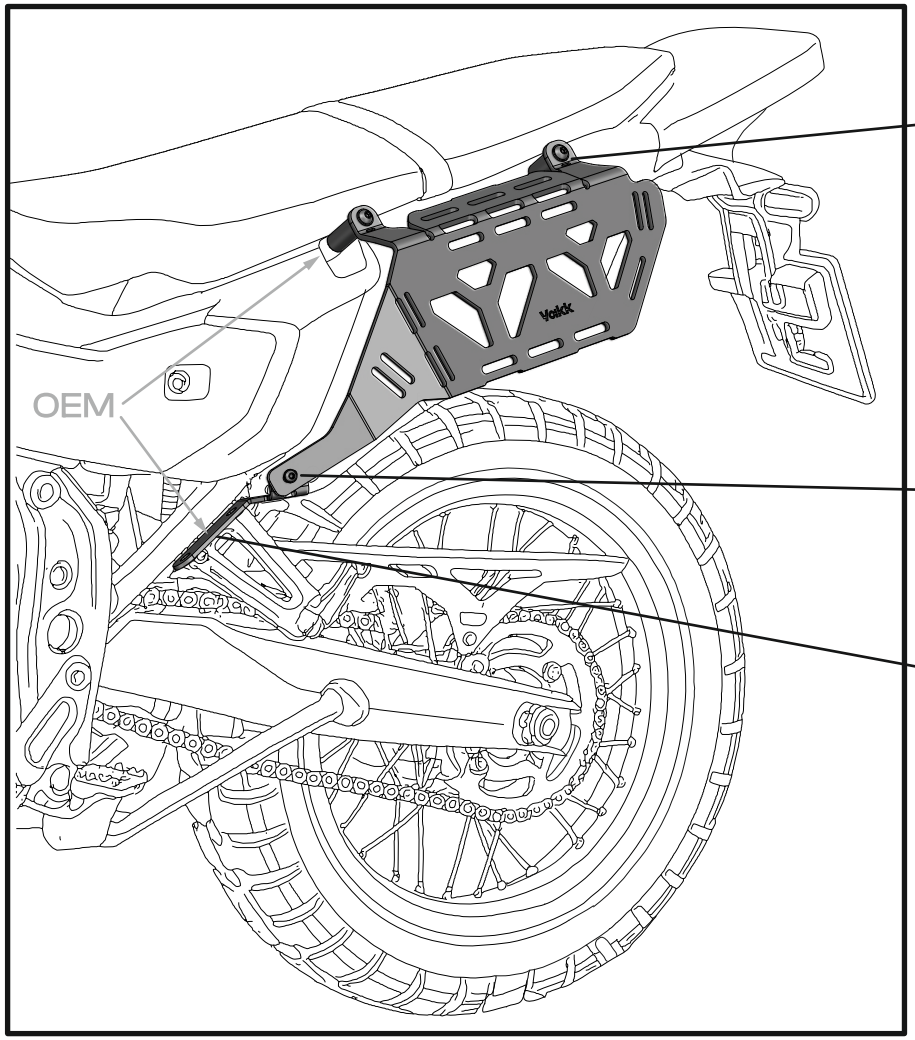


Fig.2

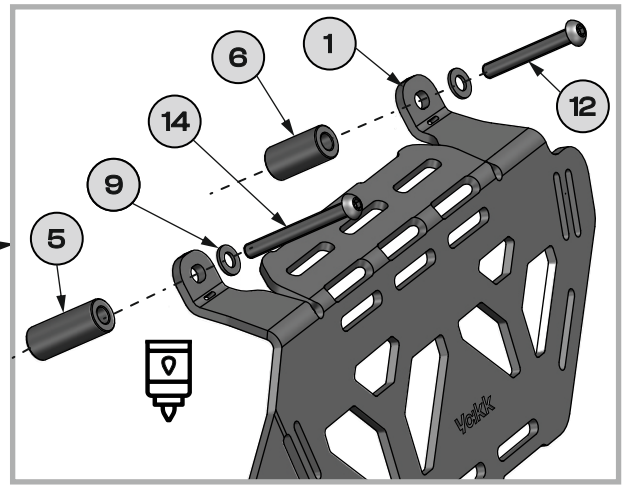


Fig. 3

**NOTE:** Use the appropriate bolt lengths and spacers for mounting as shown in **[Fig.3]**.
Loosely attach the Left luggage plate **[1]** in the indicated position — first at the rear using bolt **[12]** (M8x60 DIN-7380), washers **[9]** (M8-DIN 125), and spacer **[6]** H35, then at the front using bolt **[14]** (M8x70 DIN-7380), washer **[9]** (M8-DIN125), and spacer sleeve **[5]** H45.
Repeat the procedure on the opposite side of the motorcycle..**[Fig.3]**

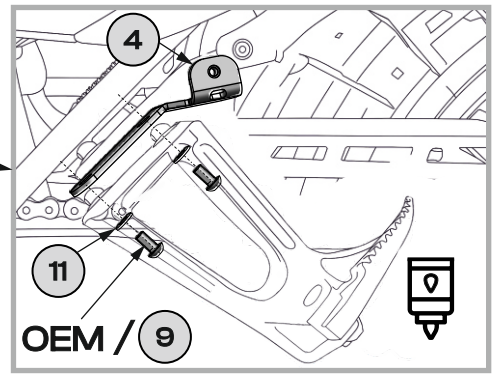


Fig.4

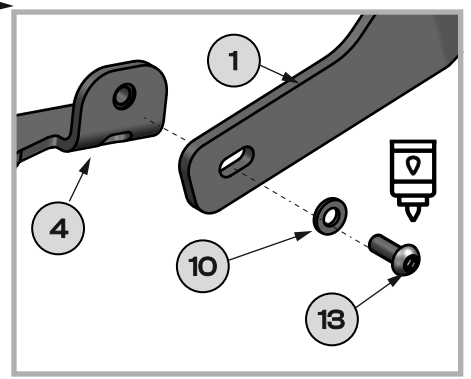


Fig.5

Attach the Left luggage plate [1] to the Right bracket [4] using bolt **[13]** (M6×16-DIN7380) and washer **[12]** (M6-DIN125).Repeat the procedure on the opposite side of the motorcycle.
Align all components and tighten all bolts to the specified torque. **[Fig.5]**

All bolts have to be finaly tighten after installation all parts on vehicle.

Soft luggage side racks

# Yamaha T7 Tenere 700

ID:3077856 /ID:3077858 /ID:2951911

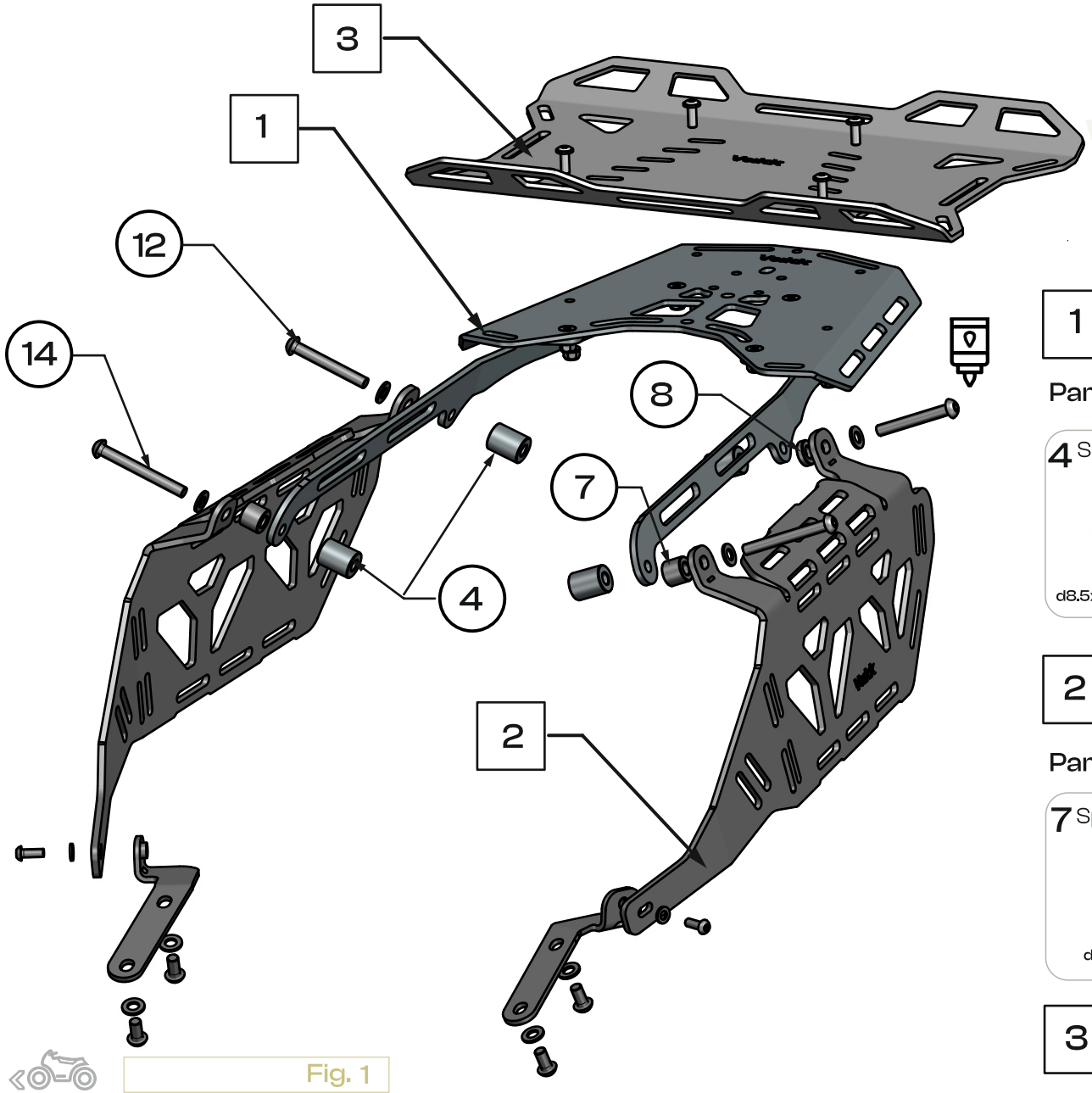


Fig. 1

## 1 Yaak exp ID: 2742346

**Parts used from product**

**4** Spacer sleeve



d8.5xD19.8xH25 — 4 x

## 2 Yaak exp ID: 3077858

**Parts used from product**

**7** Spacer sleeve



d9xD18xH15 — 2 x

**8** Spacer sleeve



d9xD18xH5 — 2 x

**12** Bolt



M8x60-DIN 7380 — 2 x

**14** Bolt



M8x70-DIN 7380 — 2 x

## 3 Yaak exp ID: 2951911

All bolts have to be finaly tighten after installation all parts on vehicle.

one person — use a medium-stregth — tighten with torque

OEM Original Equipment Manufacturer