Headlight guard

BMW 12

ID:3087274

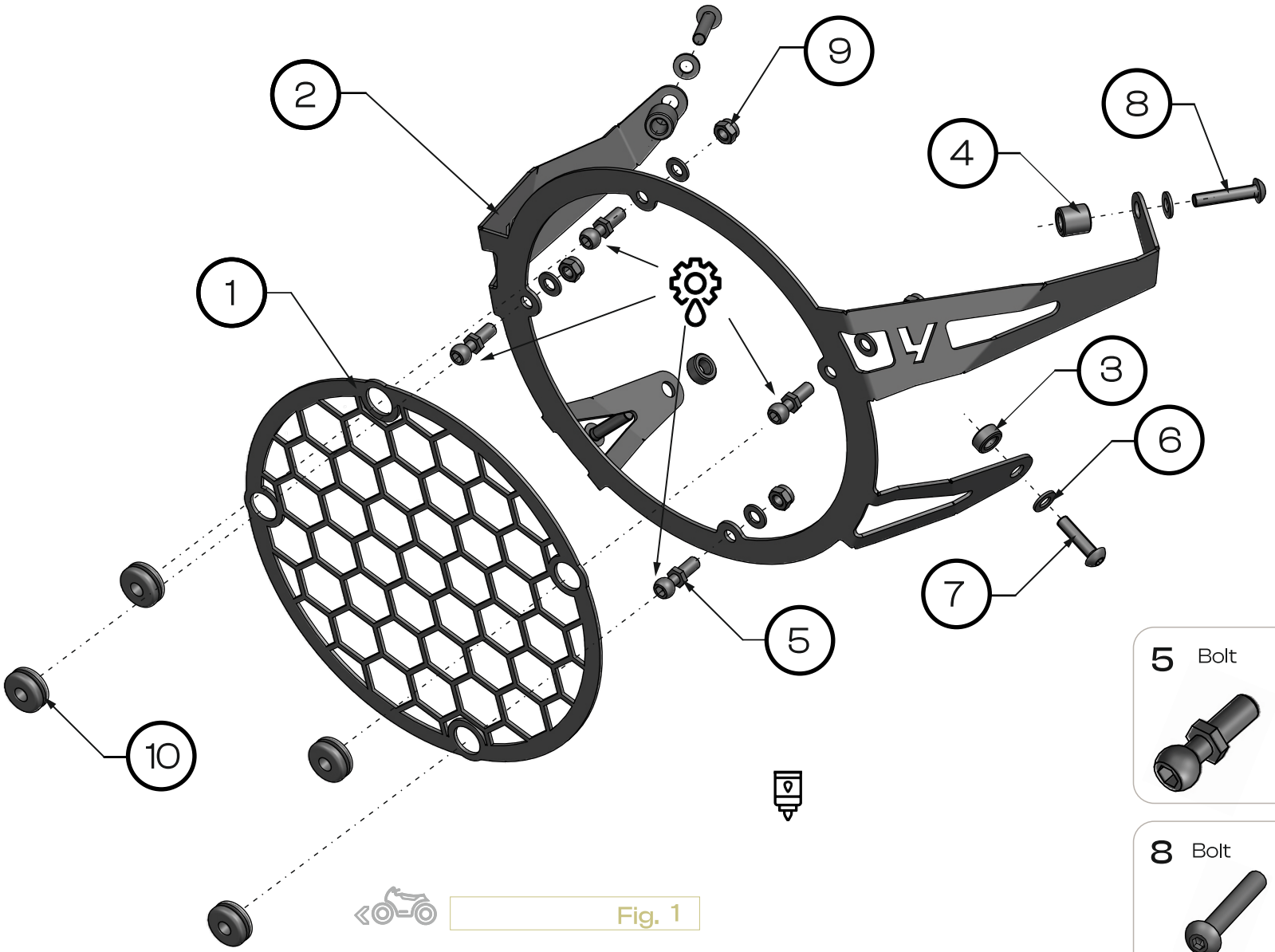

Fig. 1

1 Headlight guard	2 Frame	3 Spacer d6xD11xh5 2×
4 Spacer d6xD16xh11 2×	5 Bolt 4	6 Washer M5-DIN 125 8×
7 Bolt M5x20-DIN 7380 2×	8 Bolt M5x25-DIN 7380 2×	9 Nut M5-DIN 985 4×
10 Grommets 4×		

Read before installation.
All bolts have to be finaly tighten after installation all parts on vehicle.

one person | use a medium-stregth | tighten with torque | OEM Original Equipment Manufacturer | lublicrate

Screw the pins into the frame. Apply grease to facilitate the installation of the frame with grommets.

2 Frame



1×

5 Bolt

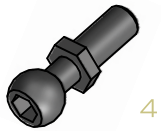

4×

6 Washer



M5-DIN 125 4×

9 Nut



M5-DIN 985 4×

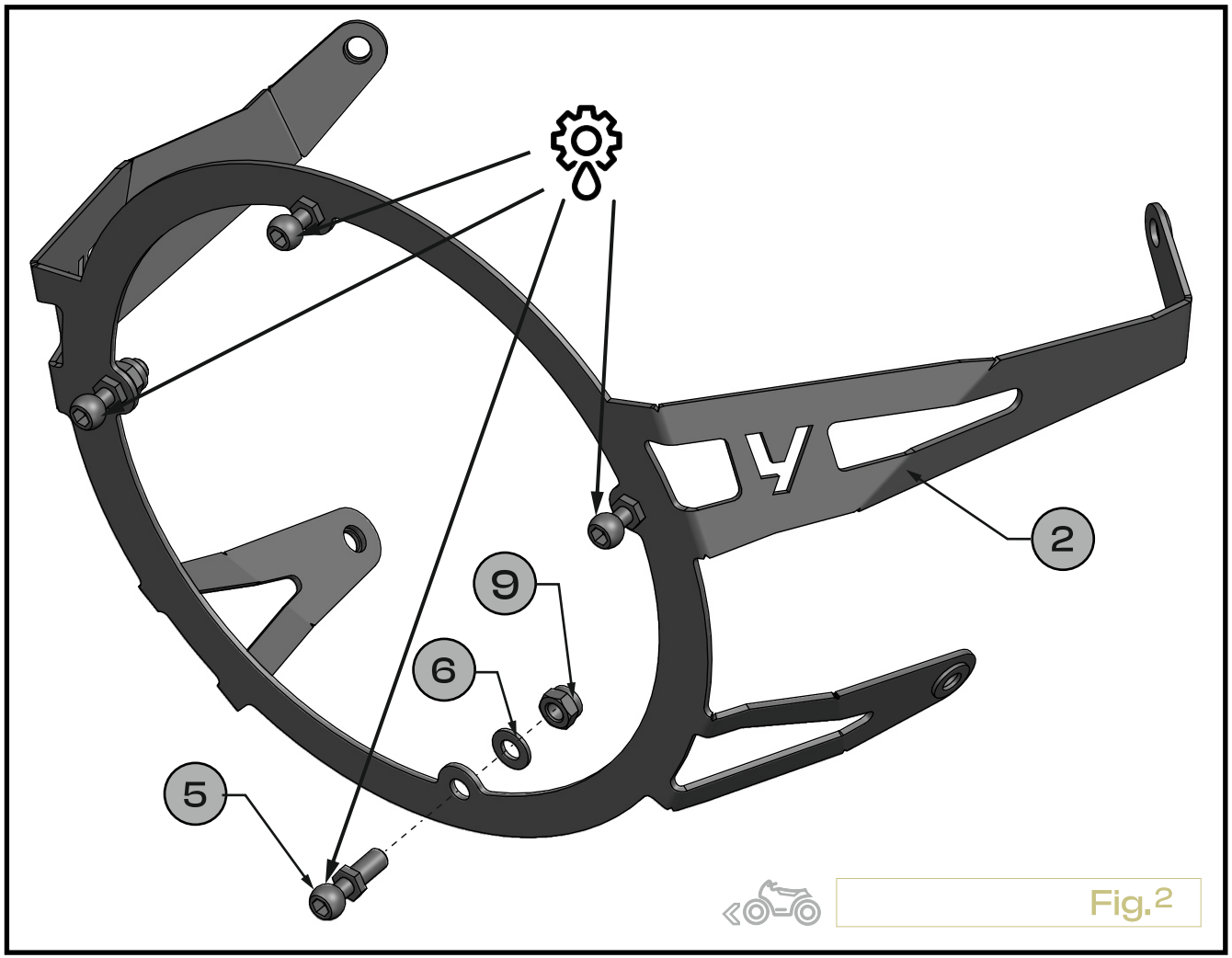

Fig.2

Unscrew the OEM bolts on the right and left sides of the motorcycle.

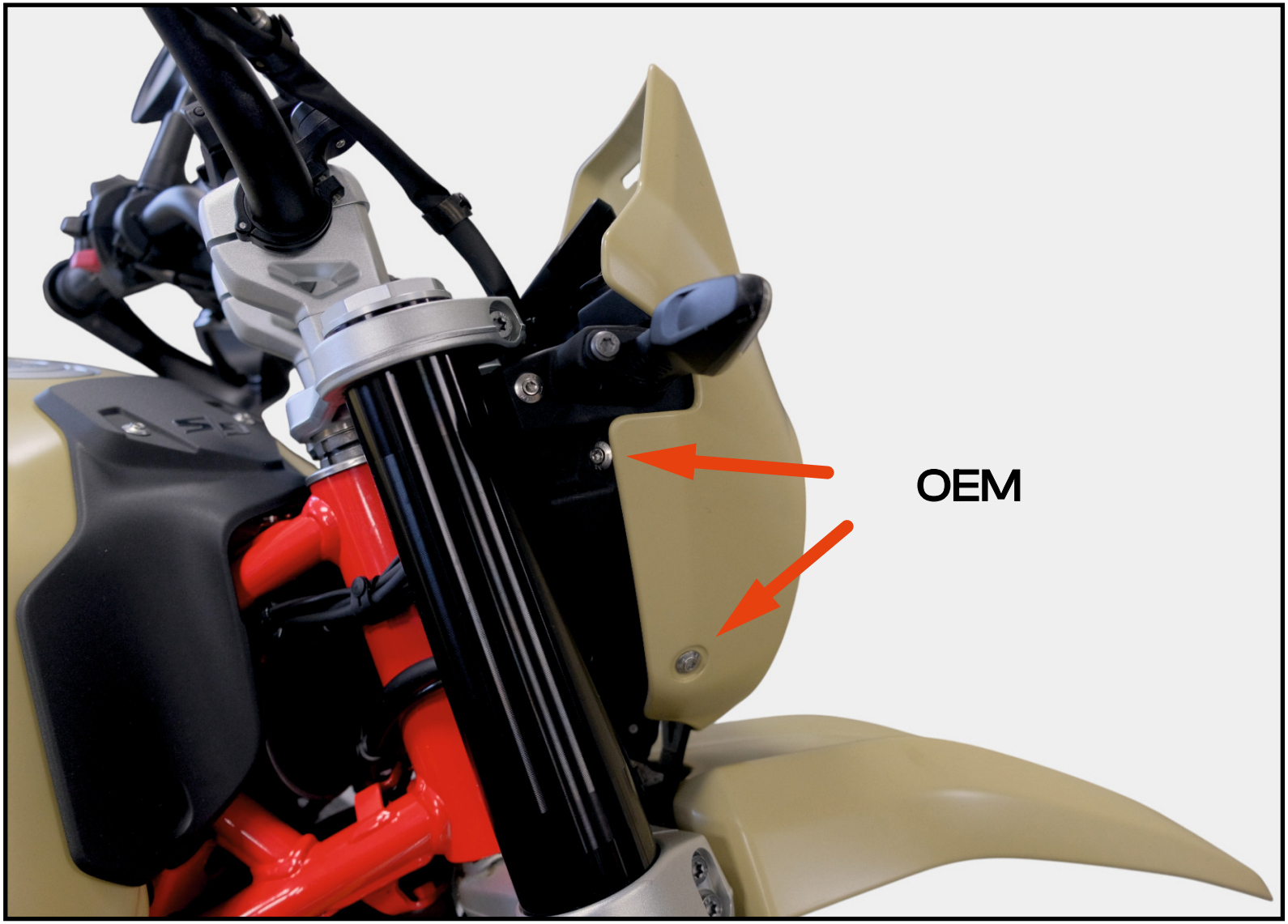

Fig.3

Screw the cover frame in place on the right and left sides of the motorcycle, using screws and spacers of the appropriate length.

3 Spacer



d6xD11xh5 2x

4 Spacer



d6xD16xh11 2x

7 Bolt



M5x20-DIN 7380 2x

8 Bolt



M5x25-DIN 7380 2x

6 Washer



M5-DIN 125 8x

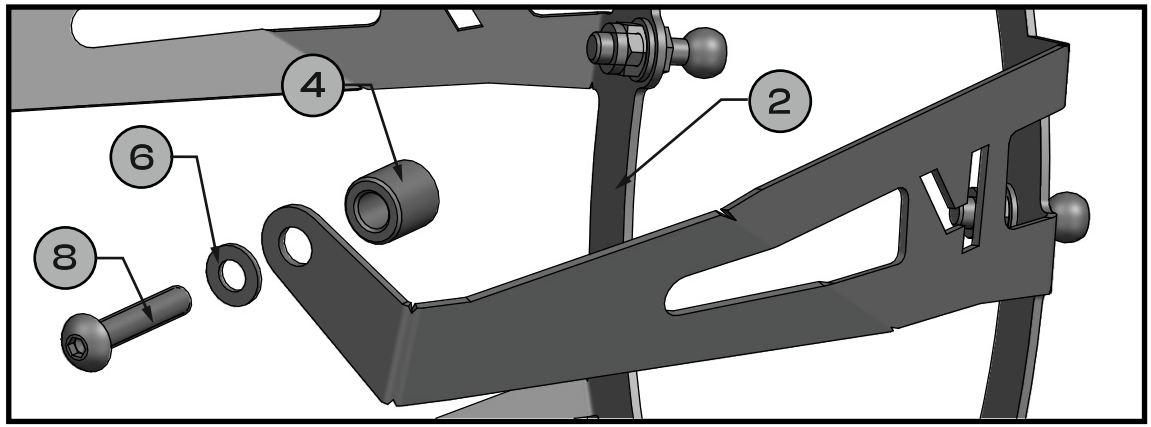

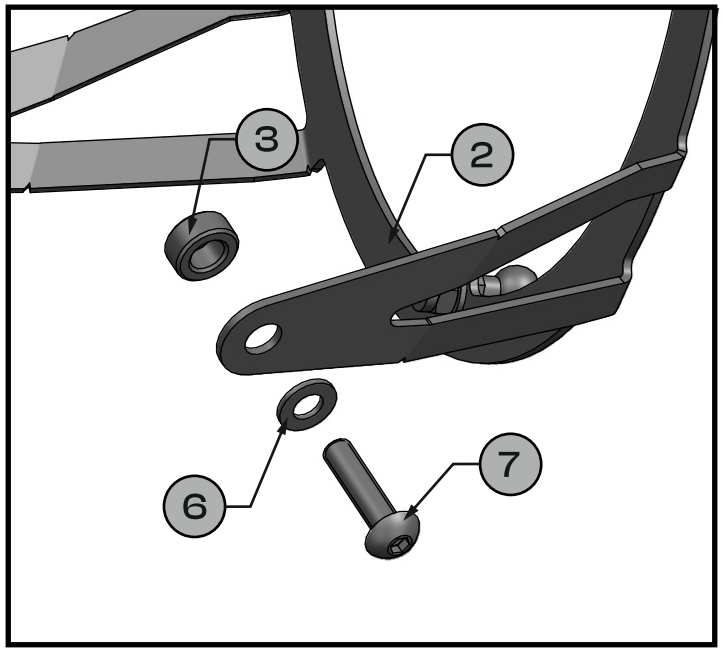

Fig.4

Screw the cover frame in place on the right and left sides of the motorcycle, using screws and spacers of the appropriate length.



Fig.5



Fig.6

Place the cover on the frame, pressing down on the grommets.



Fig.7



Fig.8