Top case rack

KTM 390 Adventure 25-

ID:3095045

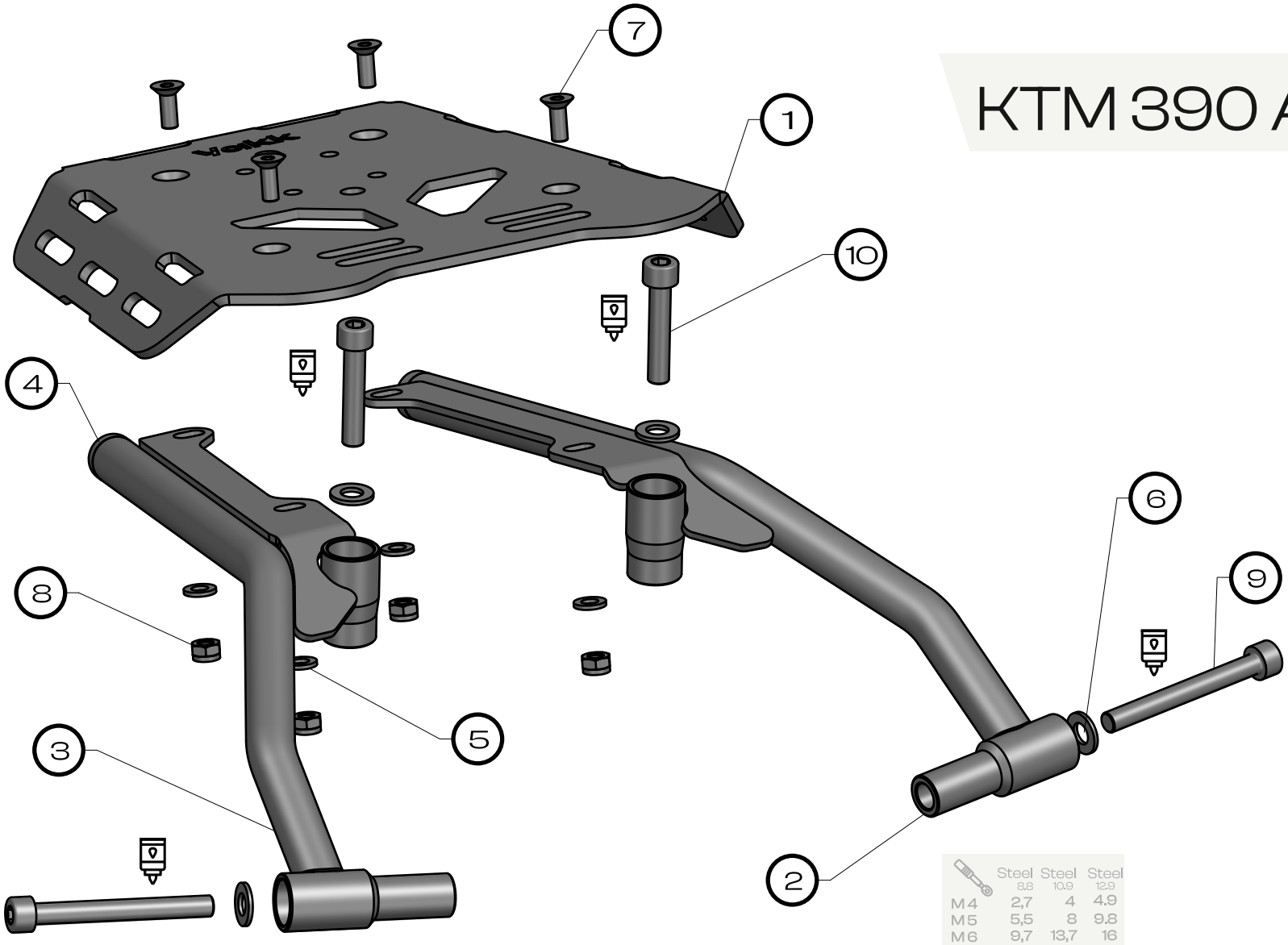

Fig. 1

	Steel 8.8	Steel 10.9	Steel 12.9
M4	2,7	4	4.9
M5	5,5	8	9.8
M6	9,7	13,7	16
M8	23	33	40
M10	47	66	83
M12	80	116	150
M14	130	184	240
M16	196	287	350
M18	270	395	490
M20	385	560	690

Read before installation.
All bolts have to be finaly tighten after installation all parts on vehicle.

one person | use a medium-stregth | tighten with torque | OEM Original Equipment Manufacturer

1 Universal top case plate — 1x

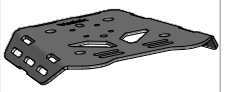

2 Left rack frame — 1x

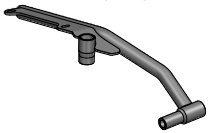

3 Right rack frame — 1x



4 End cup — 2x



5 Washer — M6-DIN 125 — 4x



6 Washer — M8-DIN 125 — 4x



7 Bolt — M6x16-DIN 7991 — 4x



8 Nut — M6-DIN 985 — 4x



9 Bolt — M8x70-DIN 912 — 2x

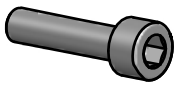

10 Bolt — M8x40-DIN 912 — 2x

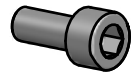

Yakk EXP

assembly instructions

yakkexp.com

EXPLORE POSSIBILITIES

Read before installation.
All bolts have to be finaly tighten after install ation all parts on vehicle.

follow yakkexp join #yakkherd

1. Remove the caps or unscrew the bolts and remove the accessories. **[Fig. 2]**
2. Install and fasten the left and right rack frames [2], [3] to the side mounting point using bolt [9] with washer [6]. Use a medium-strength adhesive. **[Fig. 3], [Fig. 4]**
3. Fasten the rear side using bolt [10] with washer [6] . Use a medium-strength adhesive. Apply the appropriate tightening torque. **[Fig. 3], [Fig. 4]**
4. Instal the end cup. **[Fig. 4]**

2 Left rack frame 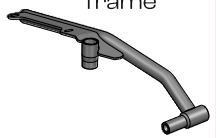 1x	3 Right rack frame  1x	4 End cup 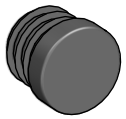 2x	6 Washer  M8-DIN 125 4x	9 Bolt 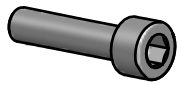 M8x70-DIN 912 2x	10 Bolt 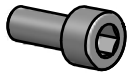 M8x40-DIN 912 2x

Fig. 4



Fig. 2

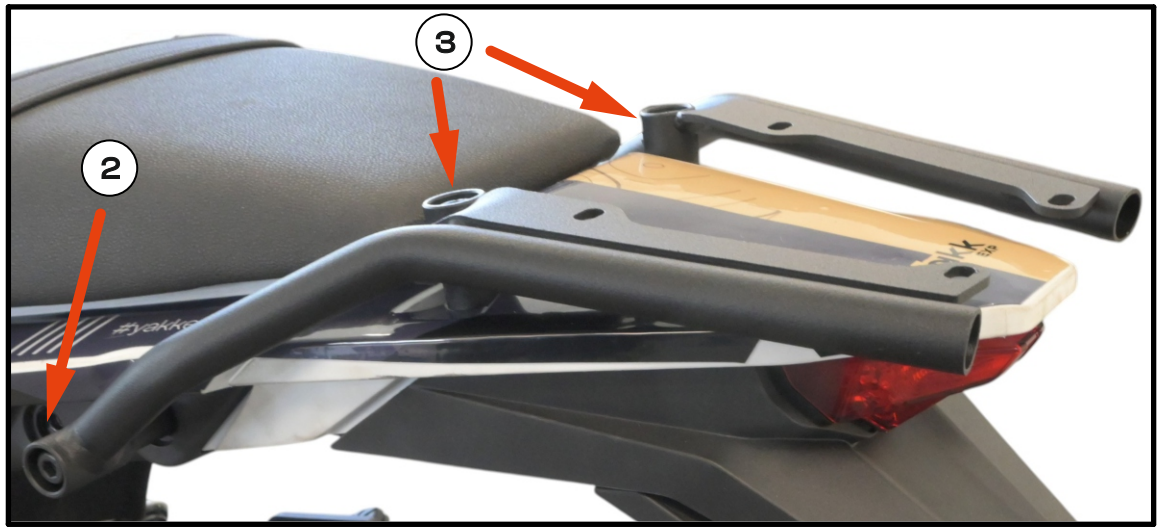

Fig. 3

one person · use a medium-stregth · tighten with torque · OEM Original Equipment Manufacturer

Yakk EXP

assembly instructions

yakkexp.com

EXPLORE POSSIBILITIES

5. Attach the universal top case plate **[1]** to **[2]** , **[3]**using screws **[7]**; secure from below with nuts **[8]** **and washers [5]. [Fig. 5] , [Fig. 6] ,**

1 Universal top case plate	5 Washer	7 Bolt	8 Nut
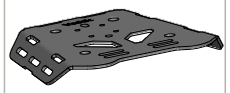			
1×	M6-DIN 125 4×	M6x16-DIN 7991 4×	M6-DIN 985 4×



Fig. 5

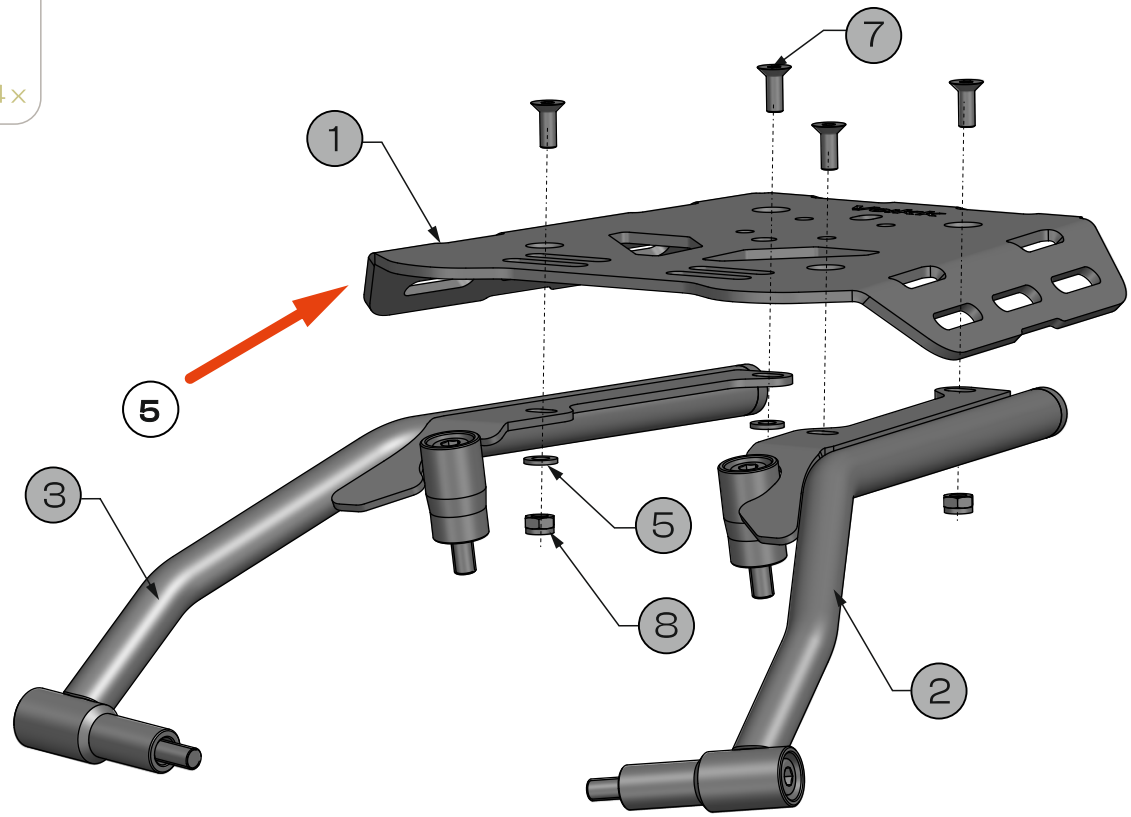

Fig. 6

one person use a medium-stregth tighten with torque **OEM** Original Equipment Manufacturer