Read before installation.

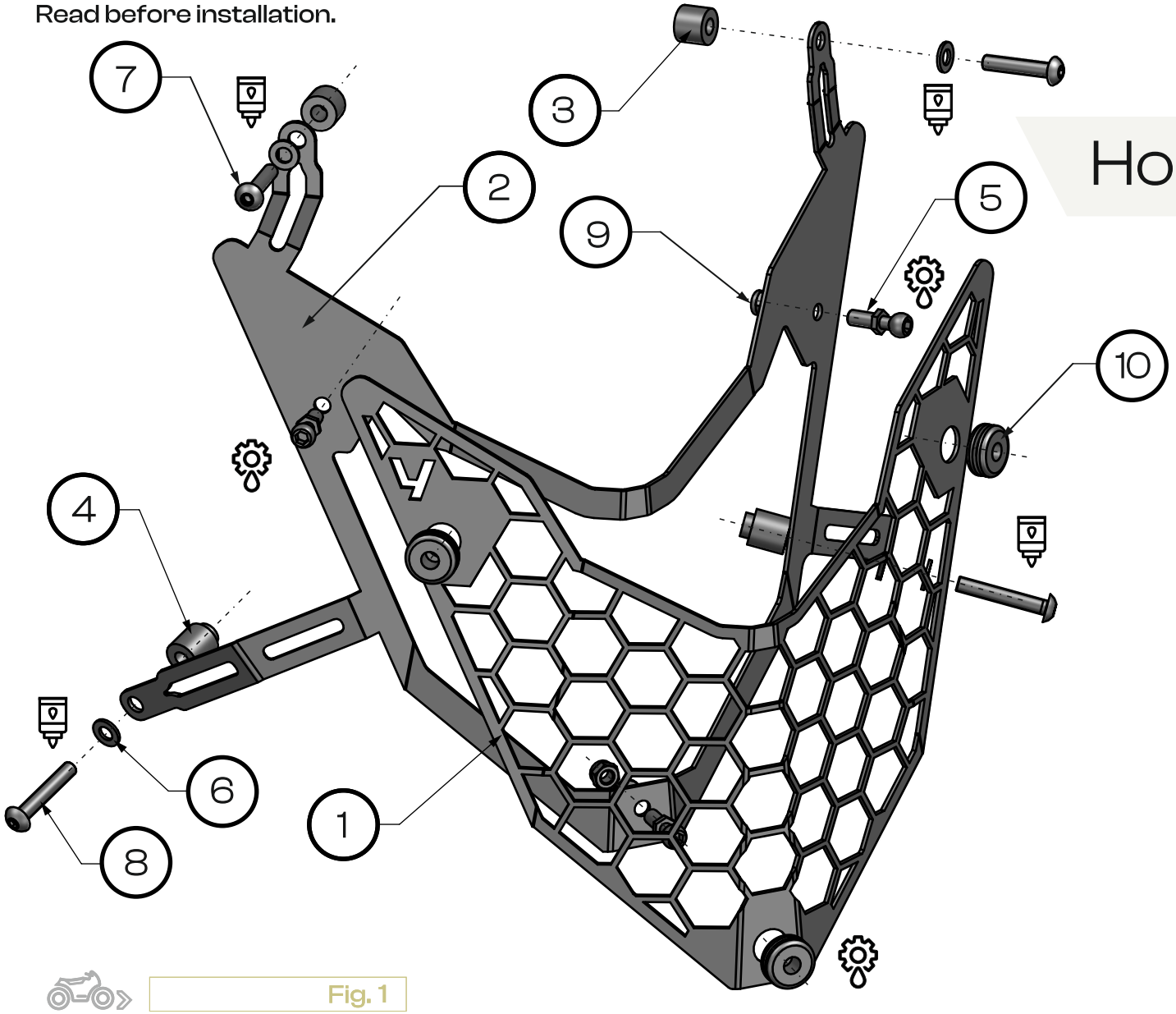

Fig. 1

Headlight guard

Honda XL 750 Transalp

ID:3034654

1 Headlight guard  1x	2 Frame 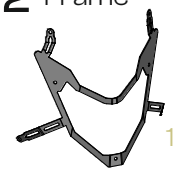 1x	
3 Spacer  d5.5xD12xh1 2x	4 Spacer  d5.5xD12xh15 2x	
5 Bolt  3x	6 Washer  M5-DIN 125 7x	7 Bolt  M5x25-DIN 7380 2x
8 Bolt  M5x30-DIN 7380 2x	9 Nut 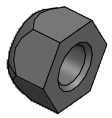 M5-DIN 985 3x	10 Grommets  3x

All bolts have to be finaly tighten after installation all parts on vehicle.

one person | use a medium-stregth | tighten with torque | OEM Original Equipment Manufacturer | lublicrate

Screw **(5)** fastening the frame **(2)**, tighten through washer **(6)** with nut **(9)**. **[Fig. 2]**

2 Frame	5 Bolt	6 Washer	9 Nut
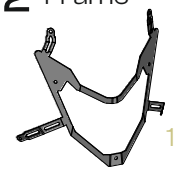 1x	 3x	 M5-DIN 125 3x	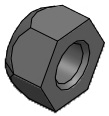 M5-DIN 985 3x

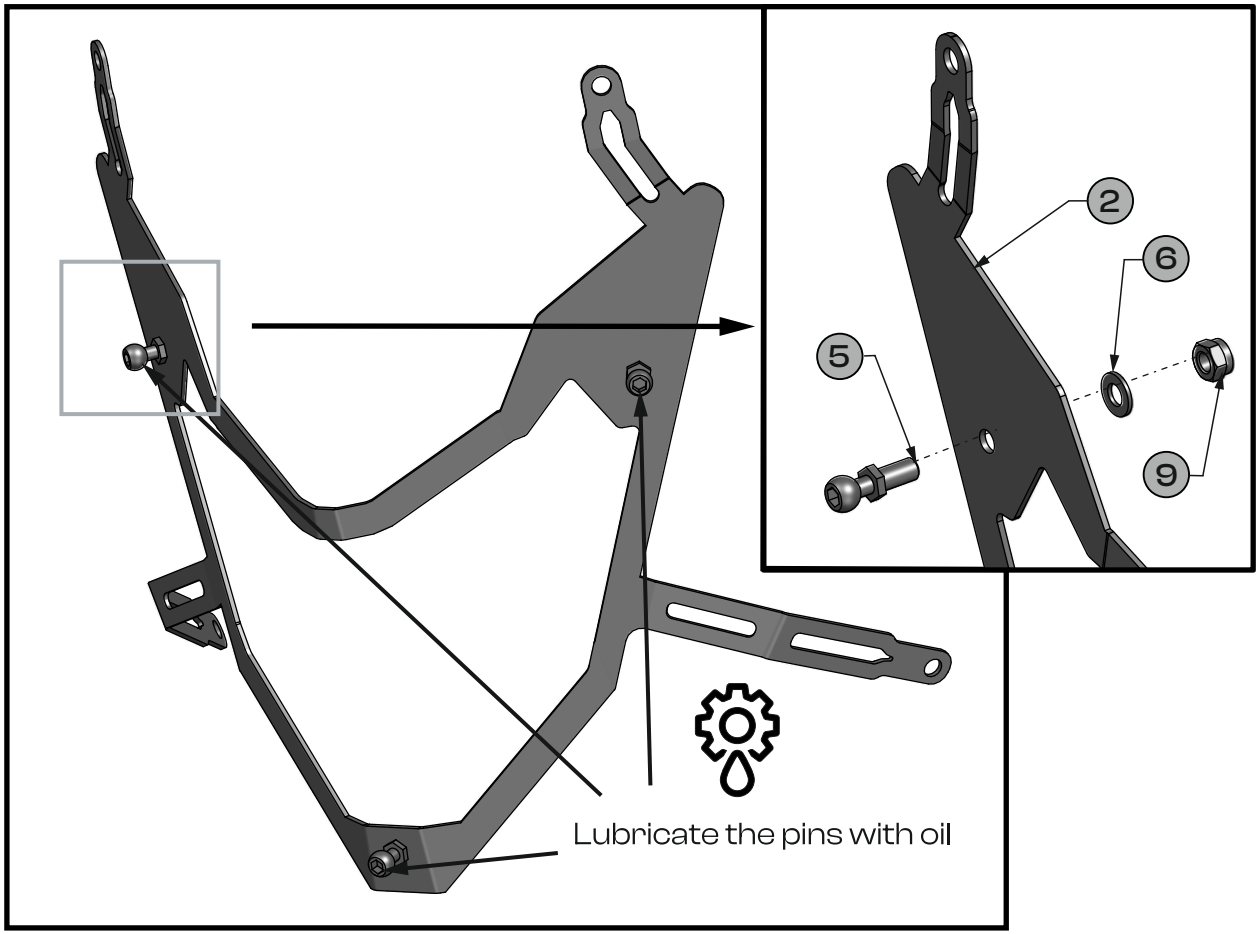

Fig.2

Remove the original bolt using the appropriate wrenches from the tool set. **[Fig.3]**



Fig.3

1 Headlight guard

1x

3 Spacer

d5.5xD12xh1 2x

4 Spacer

d5.5xD12xh15 2x

6 Washer

M5-DIN 125 4x

7 Bolt

M5x25-DIN 7380 2x

8 Bolt

M5x30-DIN 7380 2x

Screw **(7)** fastening the frame **(2)**, tighten through washer **(6)** with spacer slave **(3)**. **[Fig. 4]**

Screw **(8)** fastening the frame **(2)**, tighten through washer **(6)** with spacer slave **(4)**. **[Fig. 5]**

Install the headlight guard **[1]** on the frame **[2]** by pressing the grommets onto the bolts previously lubricated with oil. **[Fig. 6]**

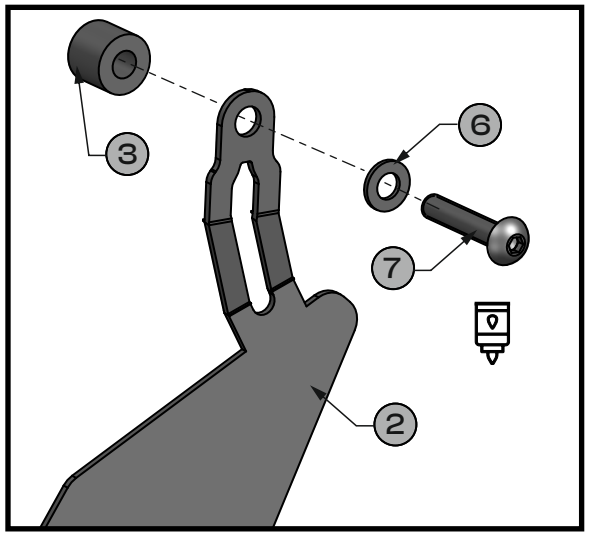

Fig. 4

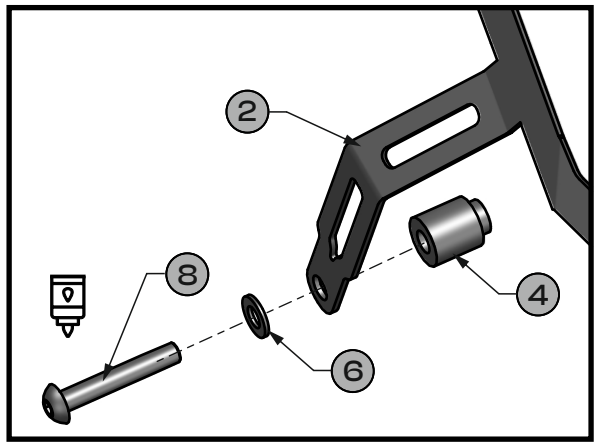

Fig. 5

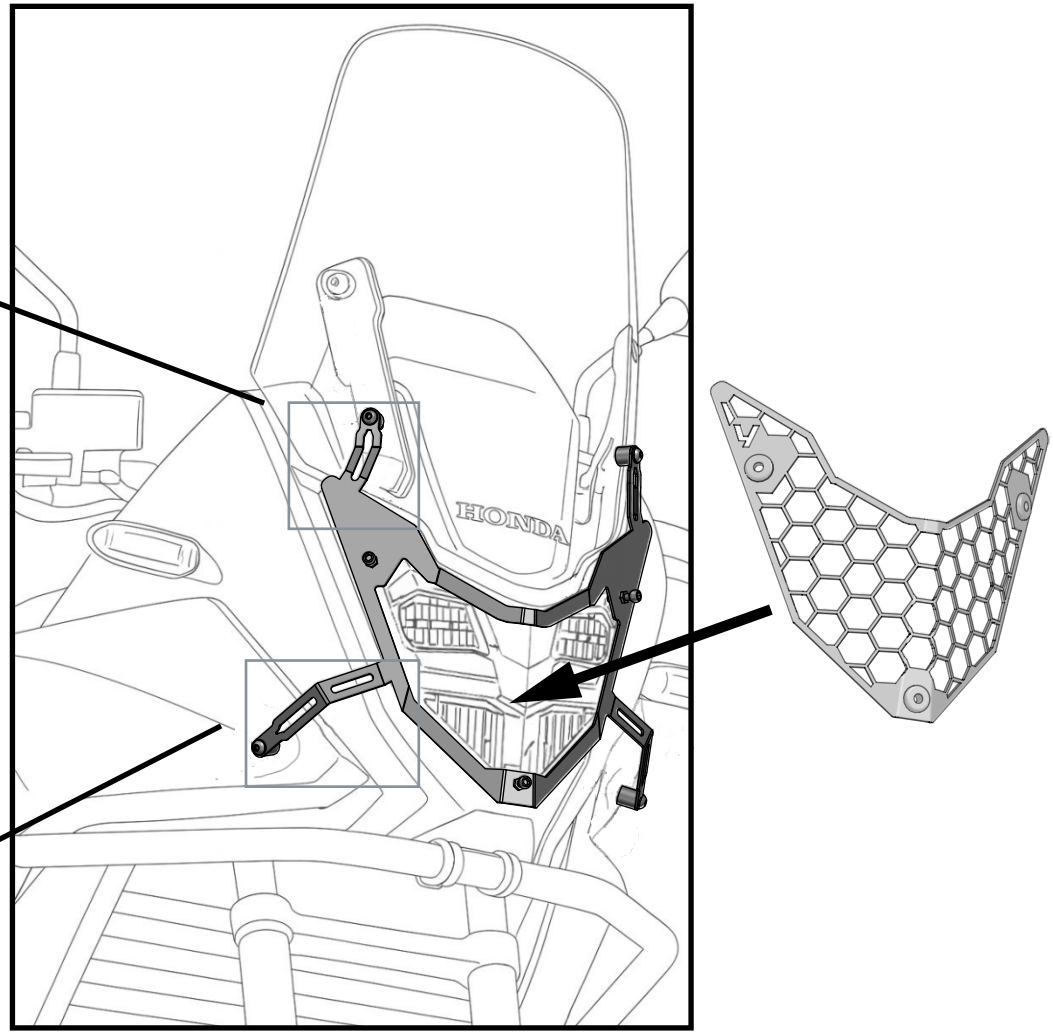

Fig. 6