Read before installation.
All bolts have to be finaly tighten after installation all parts on vehicle.

Skid plate

BMW R 1300 GS

ID:3089146

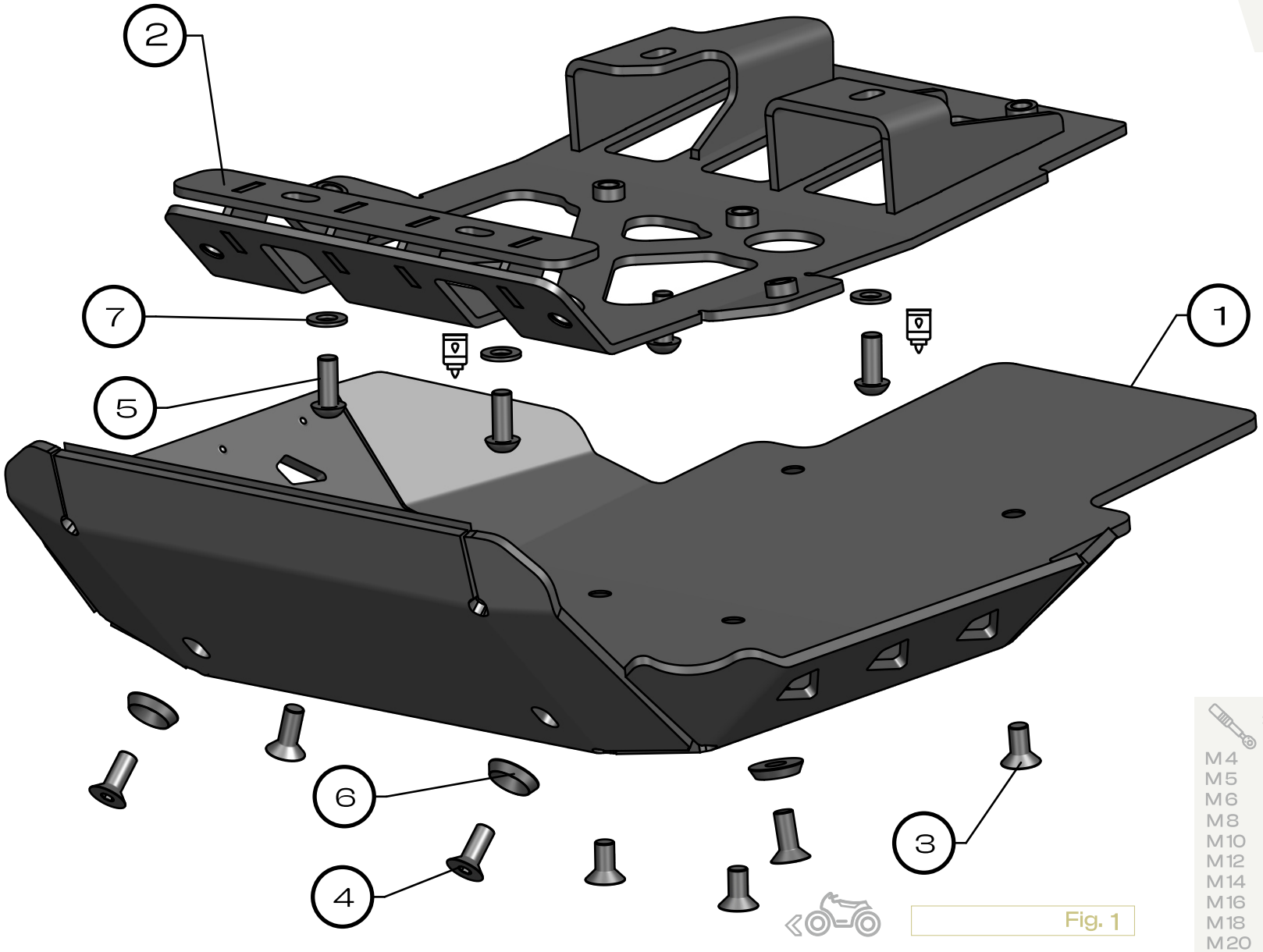

Fig. 1

1 Skid plate



1x

2 Bracket



1x

3 Bolt



4x

M8x16-DIN 7991

4 Bolt



4x

M8x20-DIN 7991

5 Bolt



4x

M8x20-DIN

6 Washer



4x

M8 -DIN 9081

7 Washer



4x

M8-DIN 125

	Steel 8.8	Steel 10.9	Steel 12.9
M4	2,7	4	4.9
M5	5,5	8	9.8
M6	9,7	13,7	16
M8	23	33	40
M10	47	66	83
M12	80	116	150
M14	130	184	240
M16	196	287	350
M18	270	395	490
M20	385	560	690

one person use a medium-stregth tighten with torque OEM Original Equipment Manufacturer

!!! Initially, attach the screws loosely.
After assembling everything together, tighten them with the appropriate force.

1. Unscrew the screws and remove the engine cover - **OEM [Fig. 2]**
2. Remove the brackets and spacer bushings securing the **OEM** skid plate.**[Fig. 3]**
3. Attach bracket **[2]** to the engine mounting points using bolts **[5]** and washers **[7]. [Fig. 4]**

Use a medium-strength threadlocker



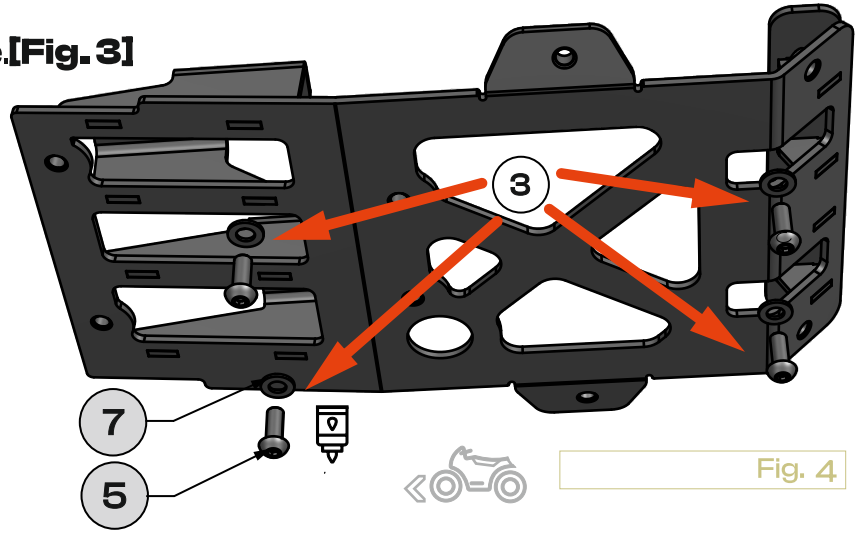

Fig. 4

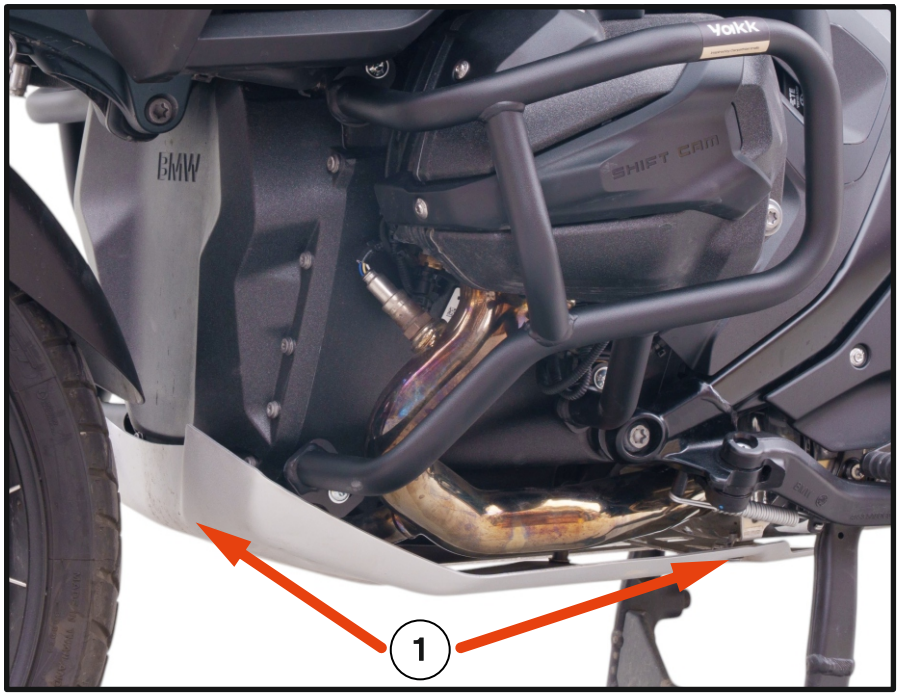

Fig. 2

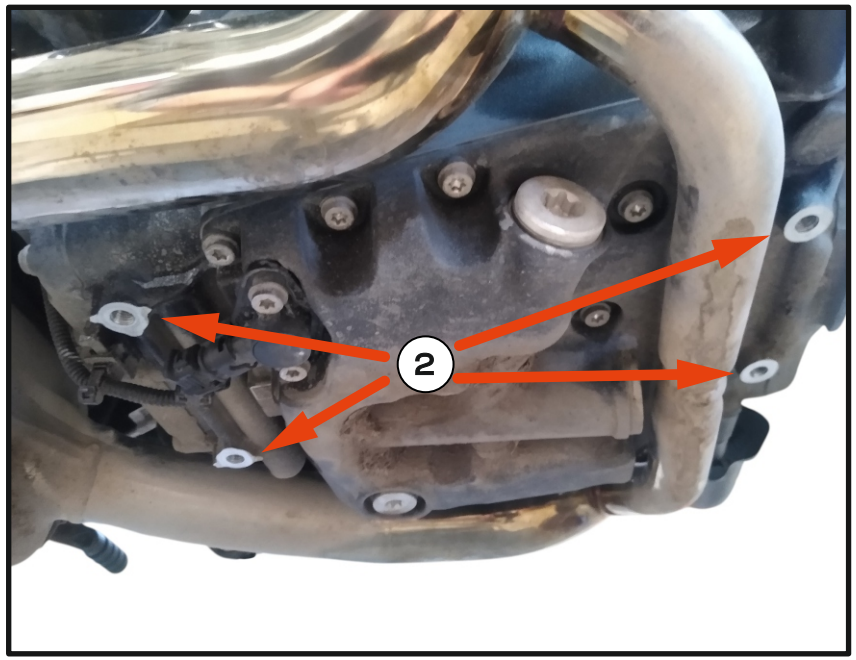

Fig. 3

!!! Initially, attach the screws loosely.
After assembling everything together, tighten them with the appropriate force.

follow yakkexp join #yakkherd

4. Screw skid plate **[1]** to bracket **[2]** mounting points using bolts **[4]** and washers **[6]. [Fig. 5], [Fig. 6]**

5. Screw the skid plate **[1]** to bracket **[2]** mounting points using screws **[3]. [Fig. 7]**

1 Skid plate	3 Bolt	4 Bolt	6 Washer
1×	4× M8x16-DIN 7991	4× M8x20-DIN 7991	4× M8 -DIN 9081

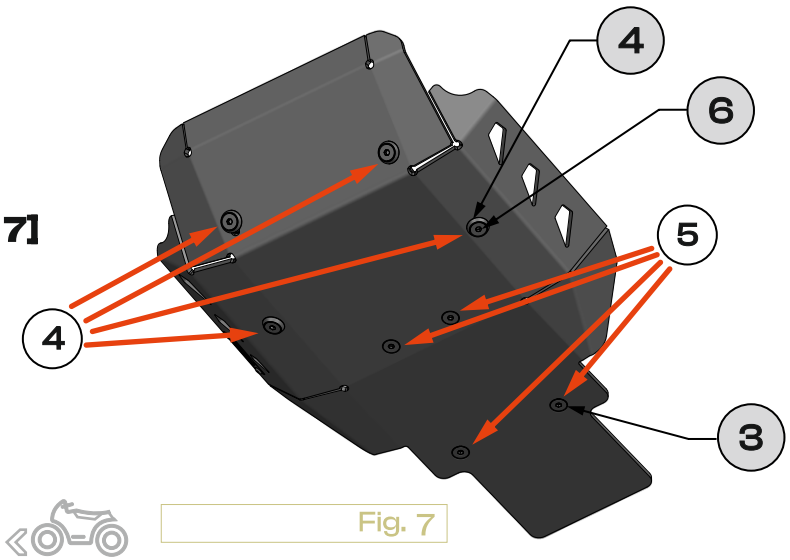

Fig. 7

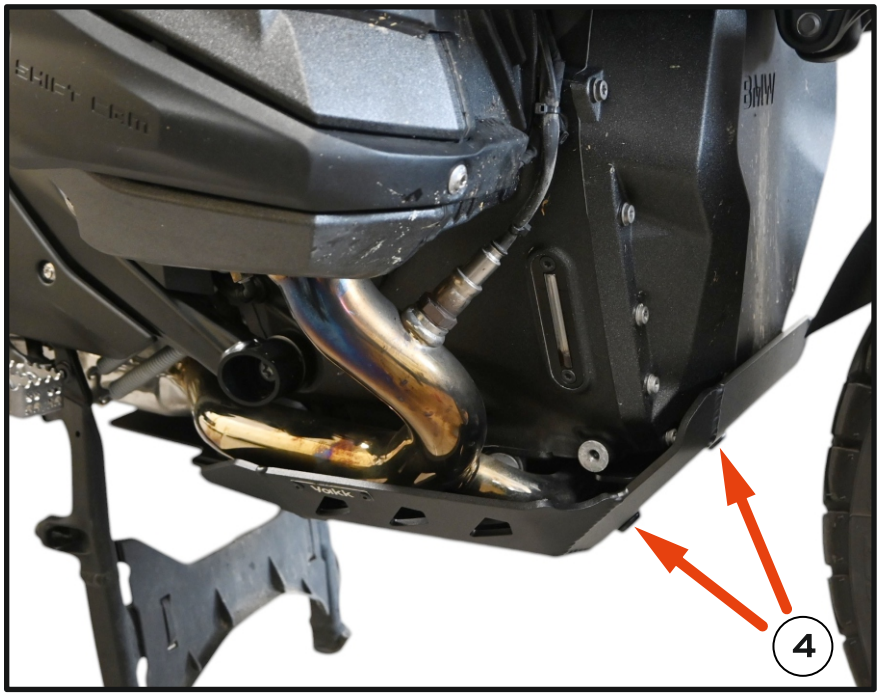

Fig. 5

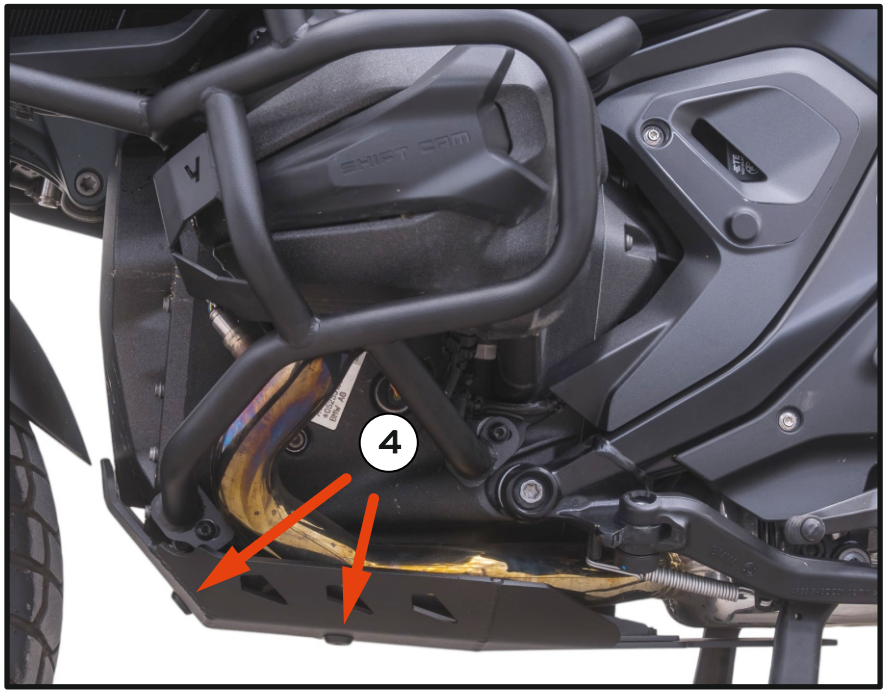

Fig. 6